Tankless Water Heaters

How a Tankless operates

When a hot water fixture opens, the flow of water causes the flow sensor impeller to spin. The larger the flow rate, the faster the impeller spins.

The computer board reads how fast the impeller is spinning to determine the flow rate.

Once the activation point (0.5 gpm on most current models) is met, the computer board moves on to the next step.

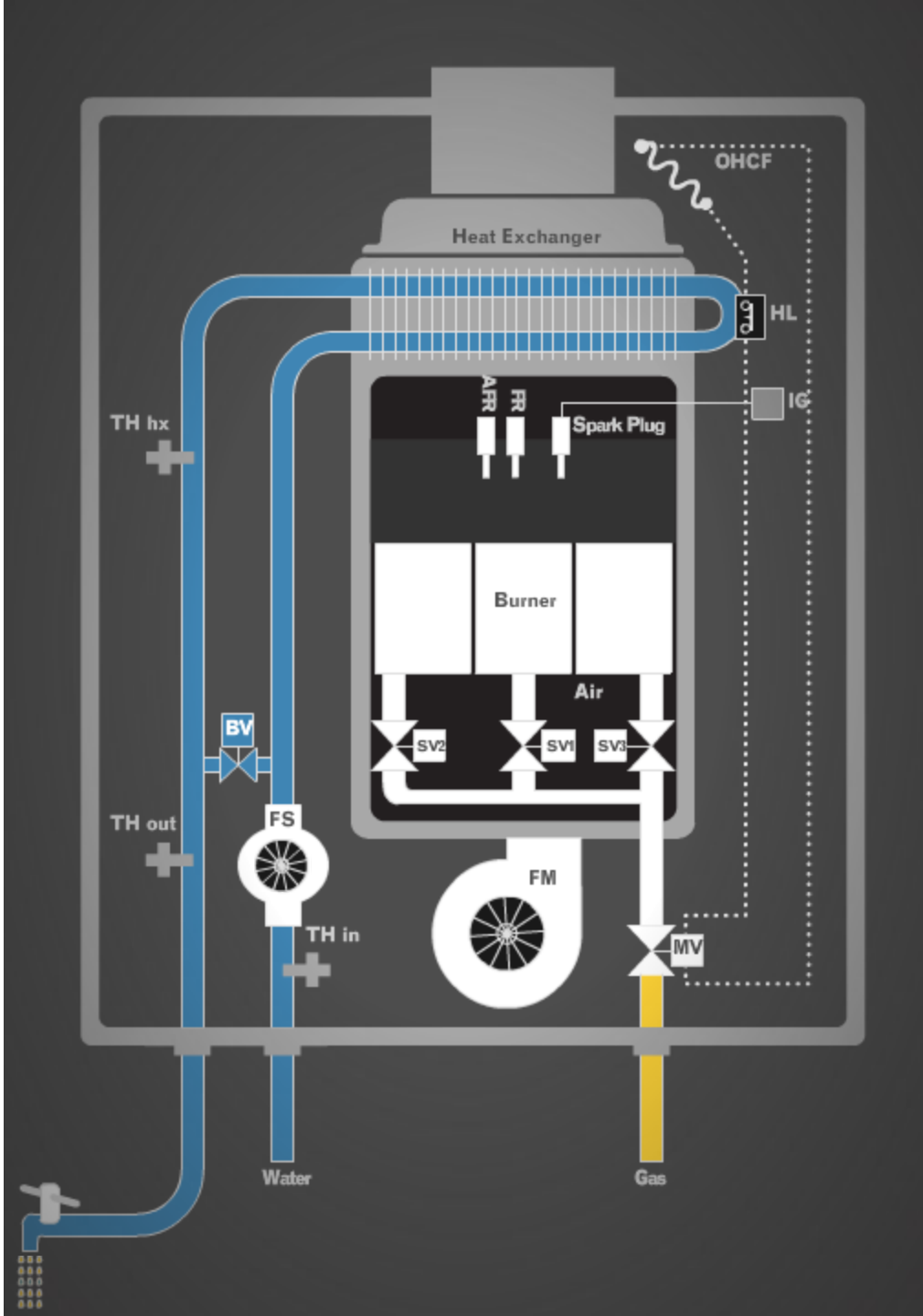

How a Tankless begins ignition

In preparation for combustion, the computer tells the fan motor to initiate. The fan sends a signal back to the computer board to signal that it is operating at the correct RPM, without blockage.

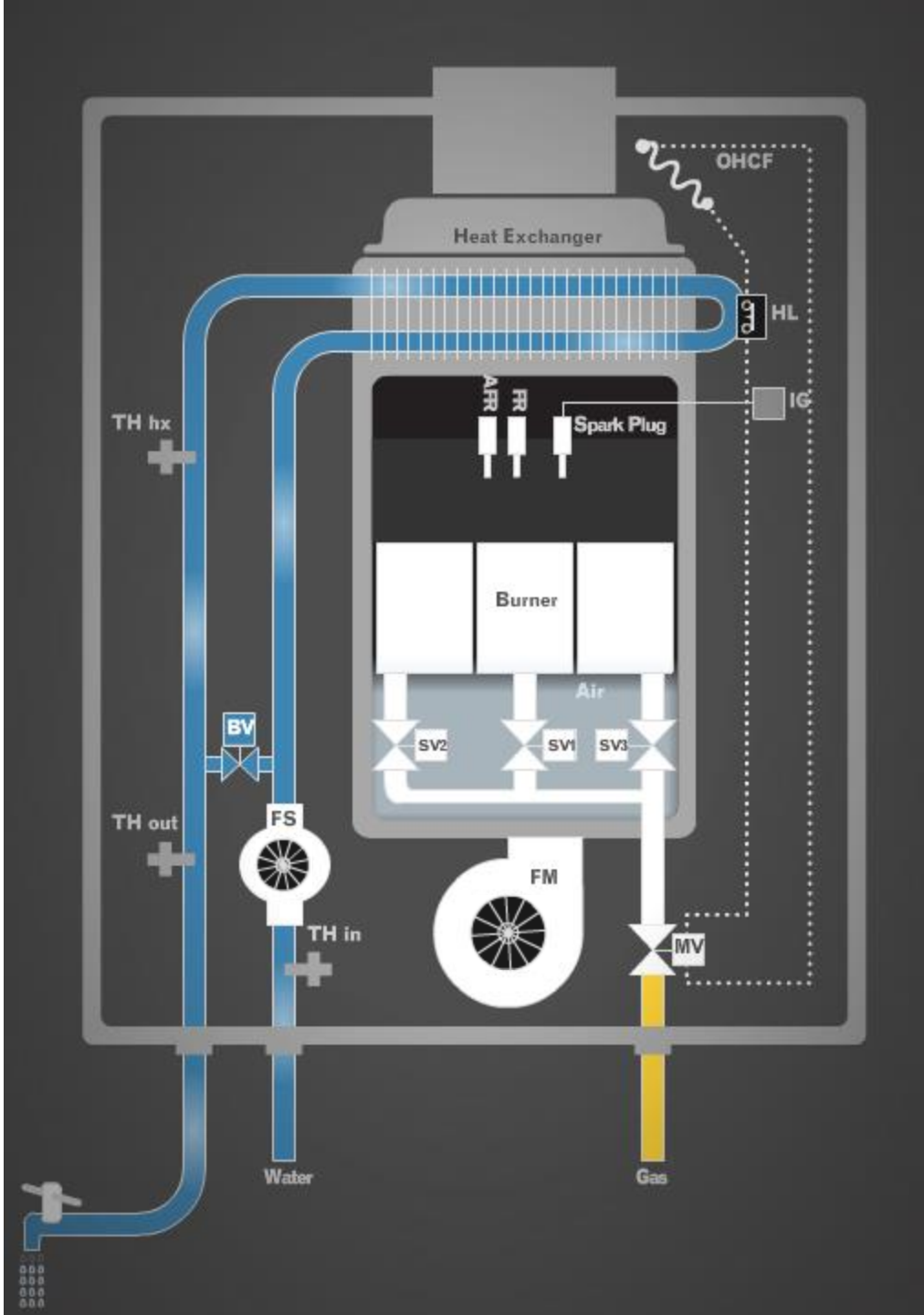

Tankless ignition process

Next, the computer gives power to the igniter, which starts a spark in the combustion chamber.
The main gas valve and solenoid valves open to let gas into the combustion chamber.

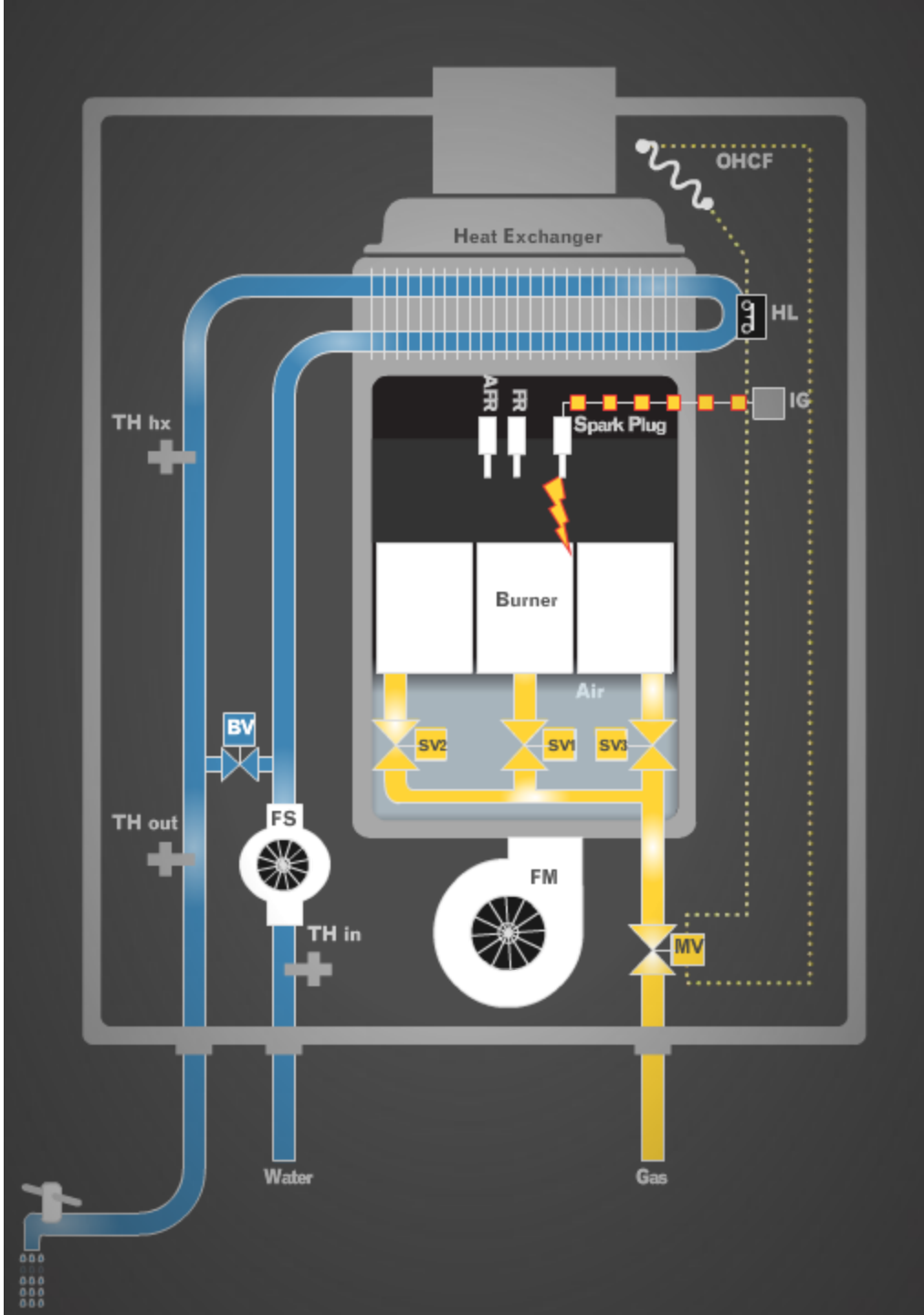

Tankless ignition process

With the precise amount of combustion air and gas for a clean burning flame, combustion occurs. The flame sensor, located within the combustion chamber, verifies that combustion has occurred.

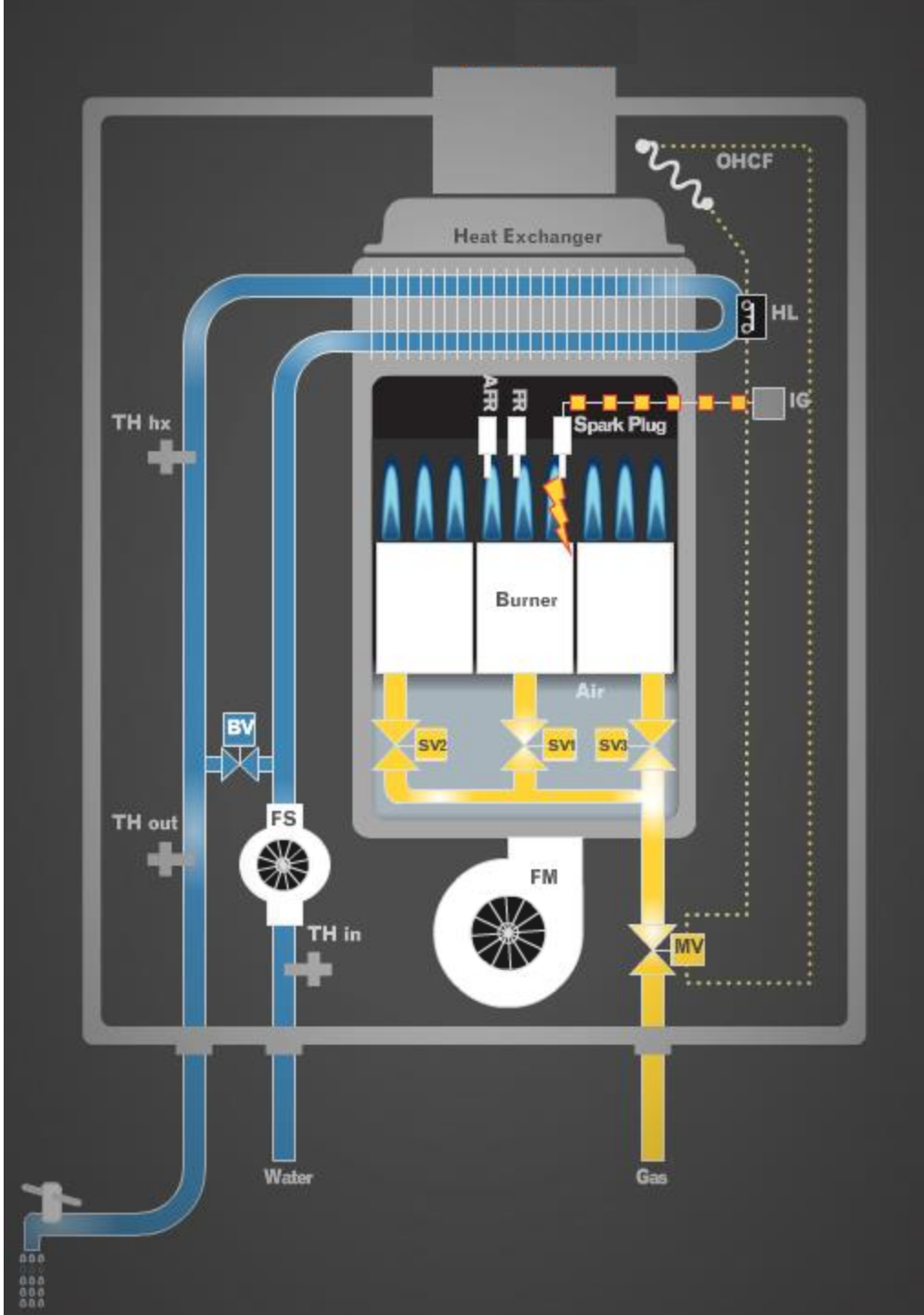

Tankless combustion process

After combustion has started, the computer board constantly utilizes information from a number of sensors in order to determine how much air and gas is needed for the desired set temperature, and modulates accordingly.
These sensors include three thermistors (reading the inlet, outlet, and heat exchanger temperatures) and the flow sensor.
The AFR (air fuel ratio) rod is another sensor inside the combustion chamber that measures the quality of the combustion, ensuring that it is a strong, blue, low CO_x producing flame.

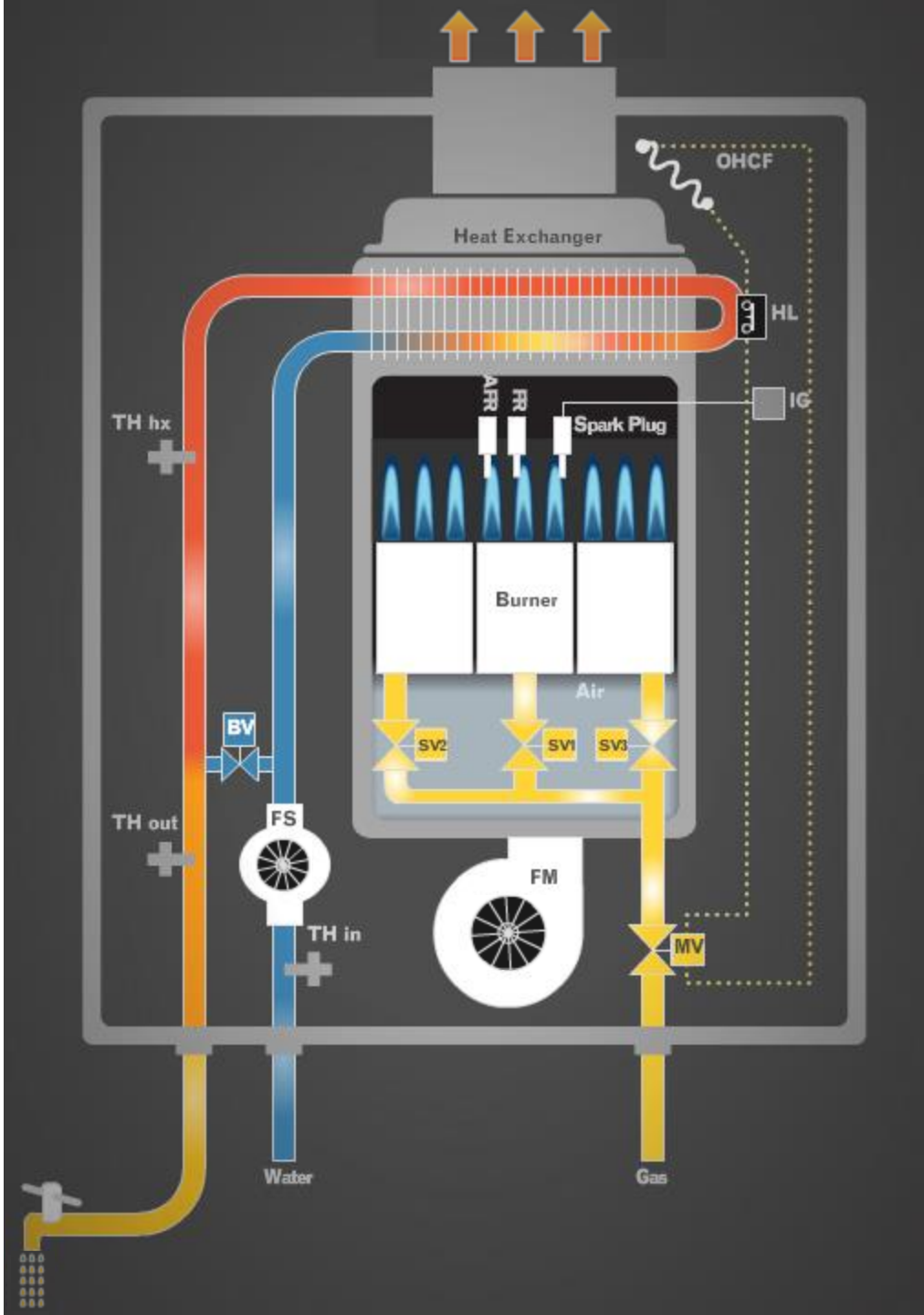

Tankless combustion process

Using all the sensors, the computer controls the components that manage the air, gas, and water flow amounts to meet the varying levels of demand it encounters from the hot water fixtures.
The bypass valve (BV) mixes cold water into the outgoing hot line to reduce pressure loss, and increase speed of modulation.
A proportional gas valve (not pictured, but between main valve and solenoids), manages the amount of gas delivered to the different sections.

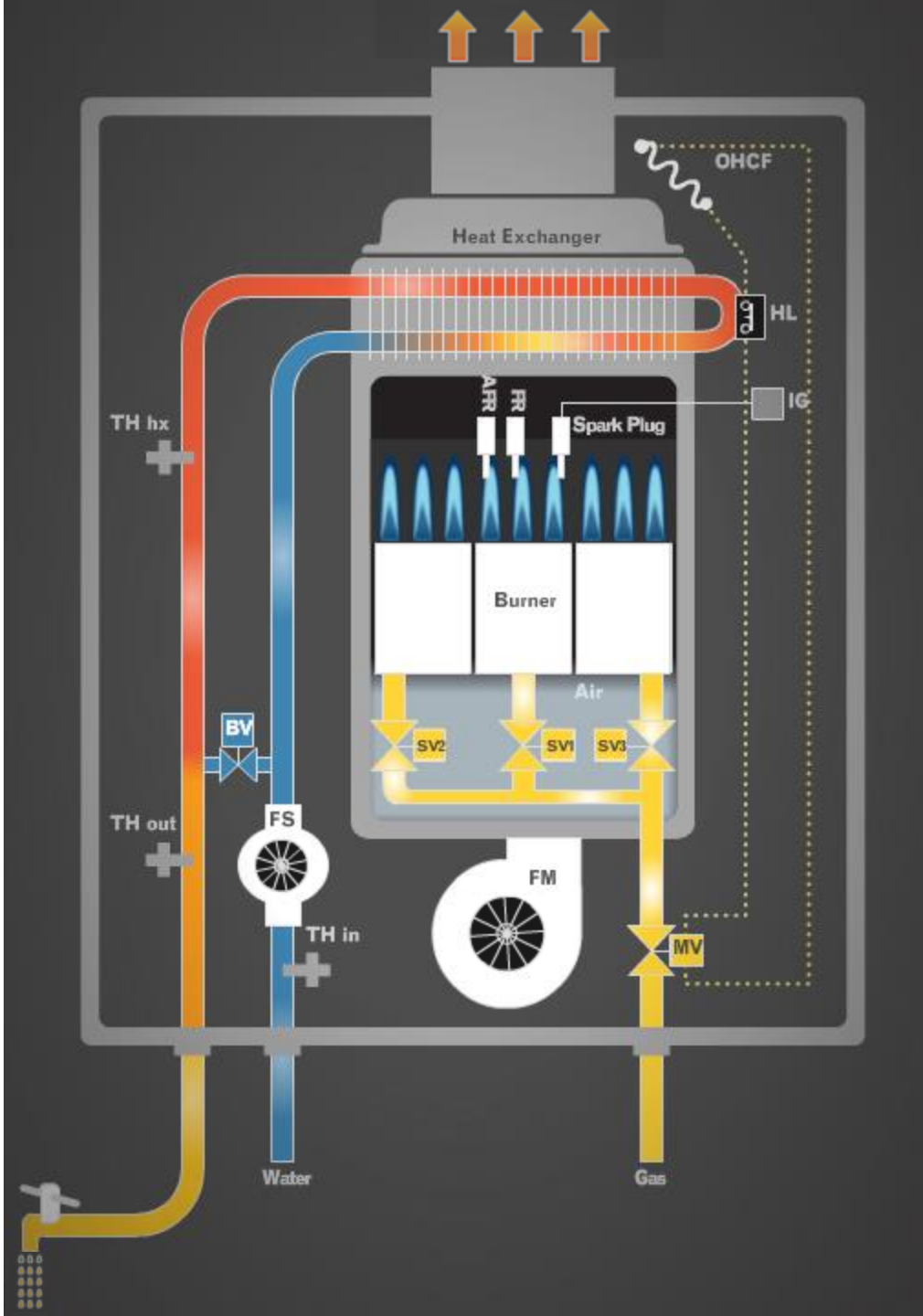

Components

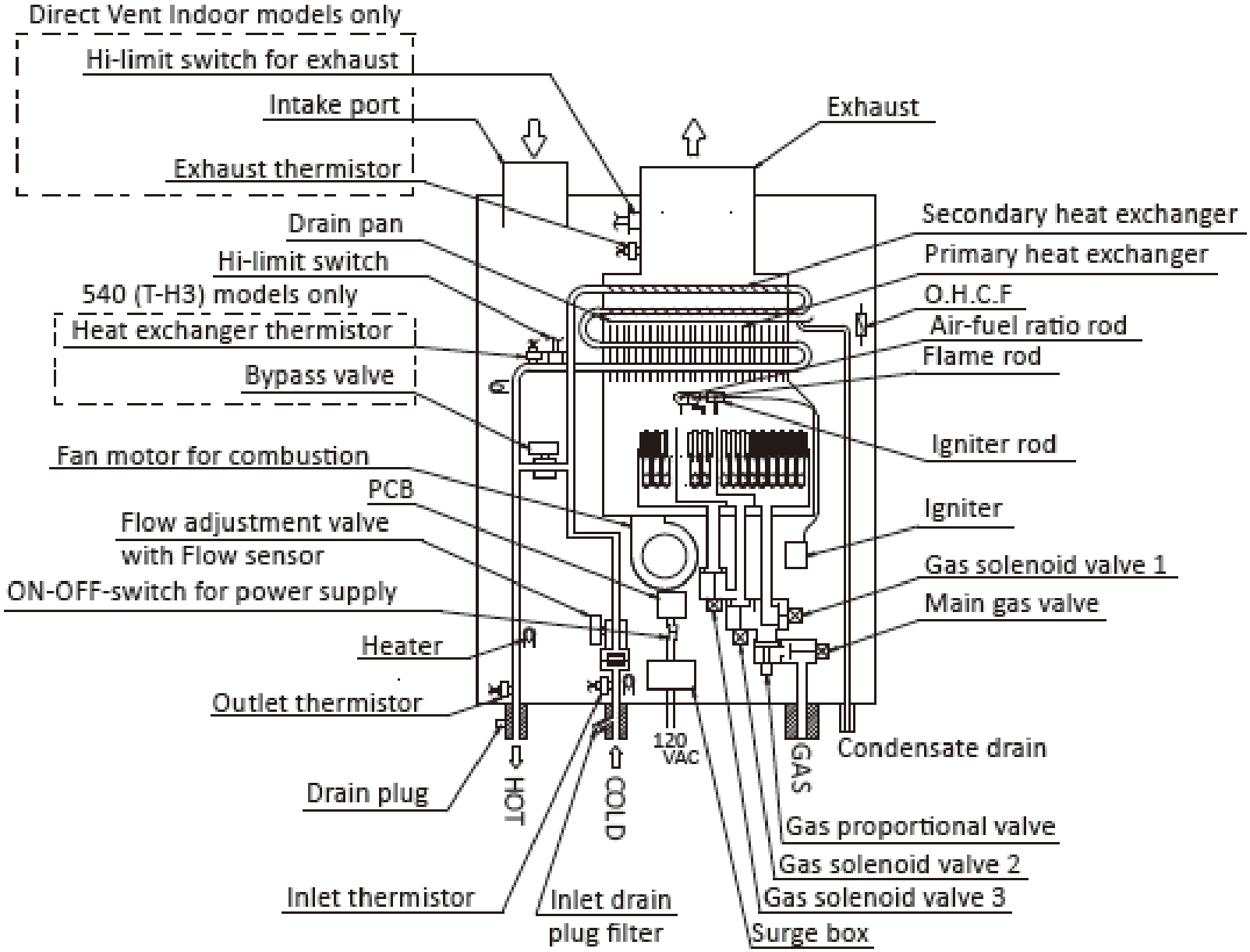
Direct Vent Indoor models only
Hi-limit switch for exhaust
Intake port
Exhaust thermistor
Exhaust
Drain pan
Hi-limit switch
540 (T-H3) models only
Heat exchanger thermistor
Bypass valve
Fan motor for combustion
PCB
Flow adjustment valve
with Flow sensor
ON-OFF-switch for power supply
Heater
Outlet thermistor
Drain plug
HOT
COLD
120
VAC
GAS
Condensate drain
Inlet thermistor
Inlet drain
plug filter
Secondary heat exchanger
Primary heat exchanger
O.H.C.F
Air-fuel ratio rod
Flame rod
Igniter rod
Igniter
Gas solenoid valve 1
Main gas valve
Gas proportional valve
Gas solenoid valve 2
Gas solenoid valve 3
Surge box

Burner Assembly

Facilitates combustion: 4 stages

The burner assembly is comprised of two types of burners: *rich* and *lean*

The assembly facilitates proper air/fuel ratios for proper combustion

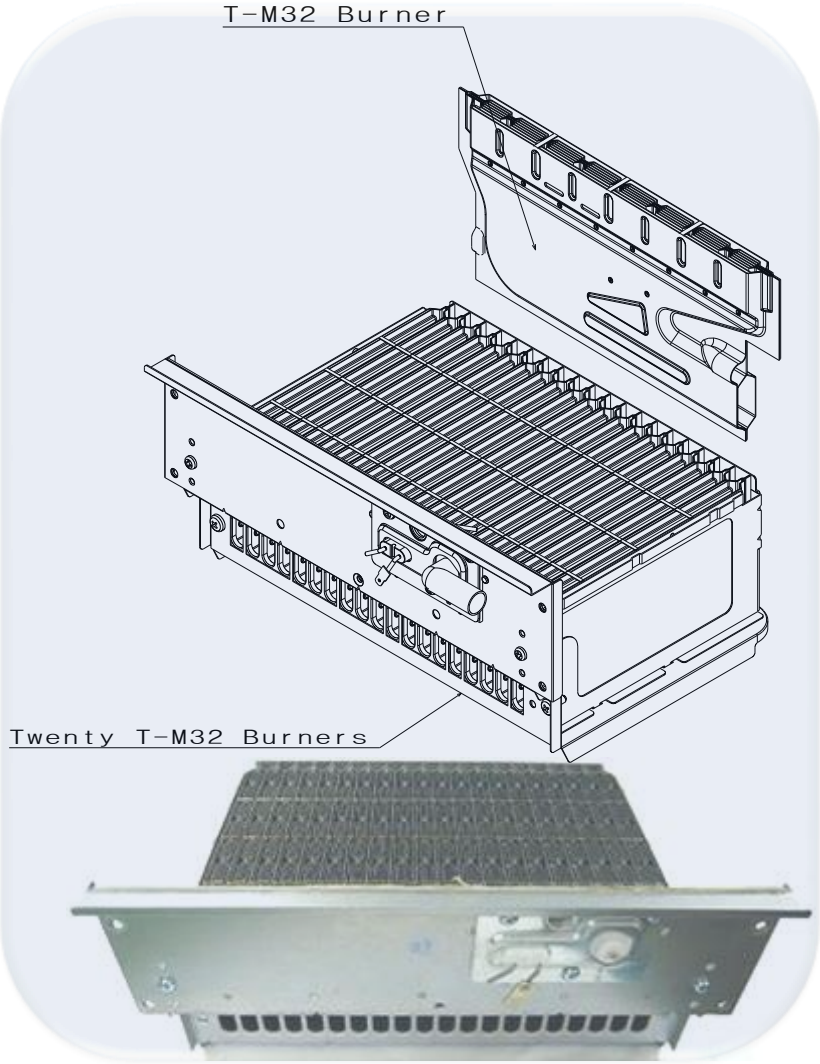

Burner Assembly

General modes of failure:

- Dust or soot deposits either on the burner surface or inside the burner assembly
- Gas leaks due to compromised gaskets

Possible effects of failure:

- Unstable flame conditions and/or flame loss
- Ignition failure
- Improper combustion / high emissions

Basic diagnostics:

- Remove assembly from combustion chamber and perform a visual inspection of the burner.

Gas Manifold

Distributes gas into the combustion chamber

Two sets of gas nozzles: one set provides to the lean burners and the other set provides to the rich burners

Manifold is divided into 3 zones, creating 4-stage combustion

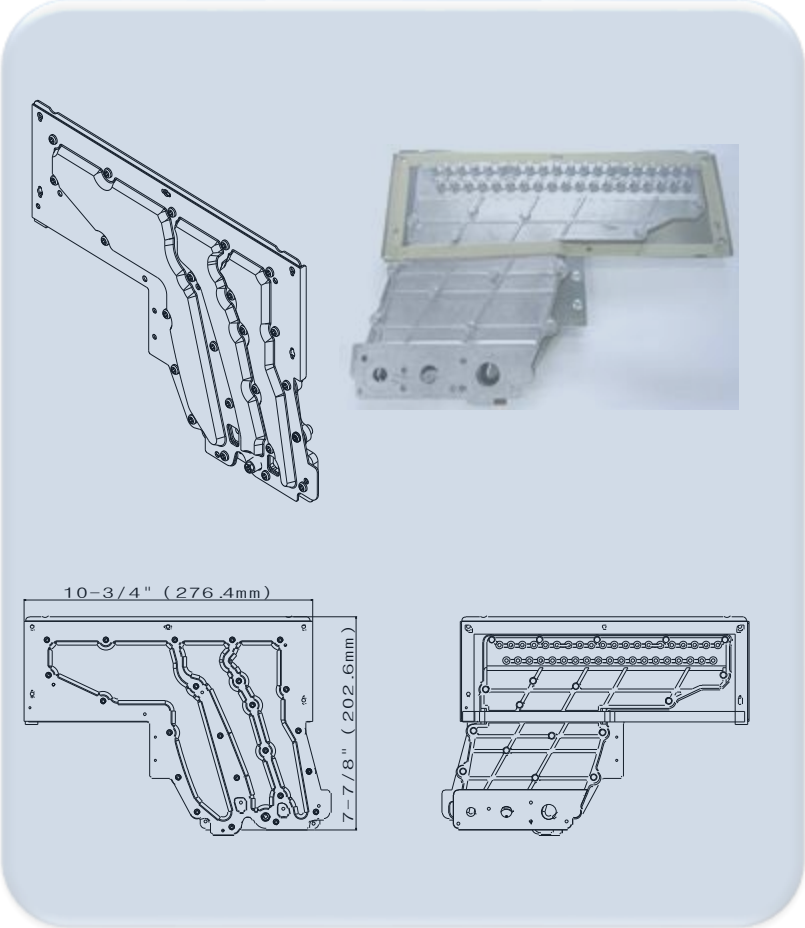

Gas Manifold

General modes of failure:

- Dust deposits on the manifold
- Gas leakage from failed gaskets

Possible effects of failure:

- Unstable flame conditions and/or flame loss
- Ignition failure
- Improper combustion / high emissions

Basic diagnostics:

- Remove gas manifold perform a visual inspection for excessive dust deposits around the nozzles.

Fan Motor

Provides combustion air into the burner chamber

Exhausts flue gases

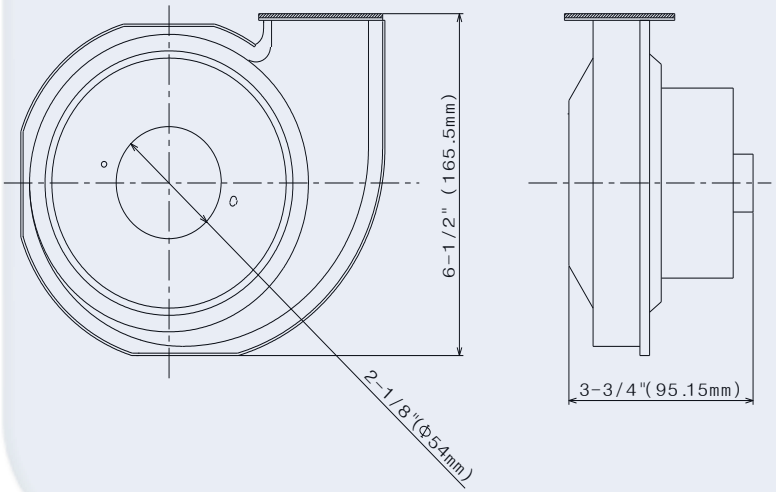

Fan Motor

General modes of failure:

- Improper fan motor speed
- Moisture on the electrical connections of the fan

Possible effects of failure:

- Inability for water heater to function
- Ignition failure
- Improper combustion / high emissions
- Abnormal sounds prior to, during, and after combustion

Basic diagnostics:

- Visual inspection of electrical connections to fan motor: moisture, dust, connection/breakage of wires
- Visual inspection of fan motor housing for moisture
- Voltage check (Service Manual)
- Fan speed check (Service Manual)

Gas Valve Assembly

Opens and closes the gas pathways going into the manifold and combustion chambers (main and solenoid valves)

Modulates the amount of gas going into those chambers (proportional valve)

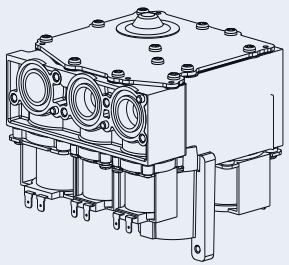

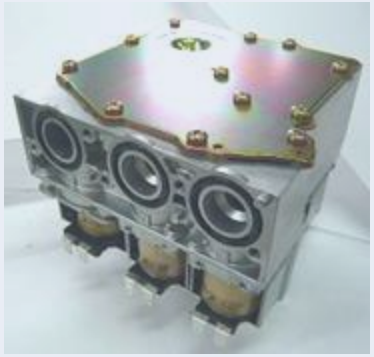

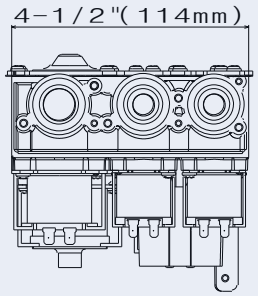

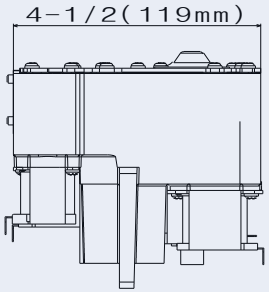

Gas Valve Assembly

General modes of failure:

- Damaged housing or O-rings causing gas leaks
- Inability to open/close (main and solenoid valves)
- Inability to properly modulate (proportional valve)

Possible effects of failure:

- Inability for water heater to function
- Ignition failure
- Improper combustion / high emissions
- Abnormal sounds during combustion
- Lack of water temperature control

Basic diagnostics:

- Visual inspection of electrical connections: moisture, dust, connection/breakage of wires
- Listen for the double "clunk" sounds from the gas valves right after fan motor initiates during start of operation.
- Voltage & resistance check (Service Manual)

Flame Sensor

Detects whether combustion has occurred during operation

Ensures that combustion is not occurring when the water heater should be off

Assembled with the AFR sensor (some models)

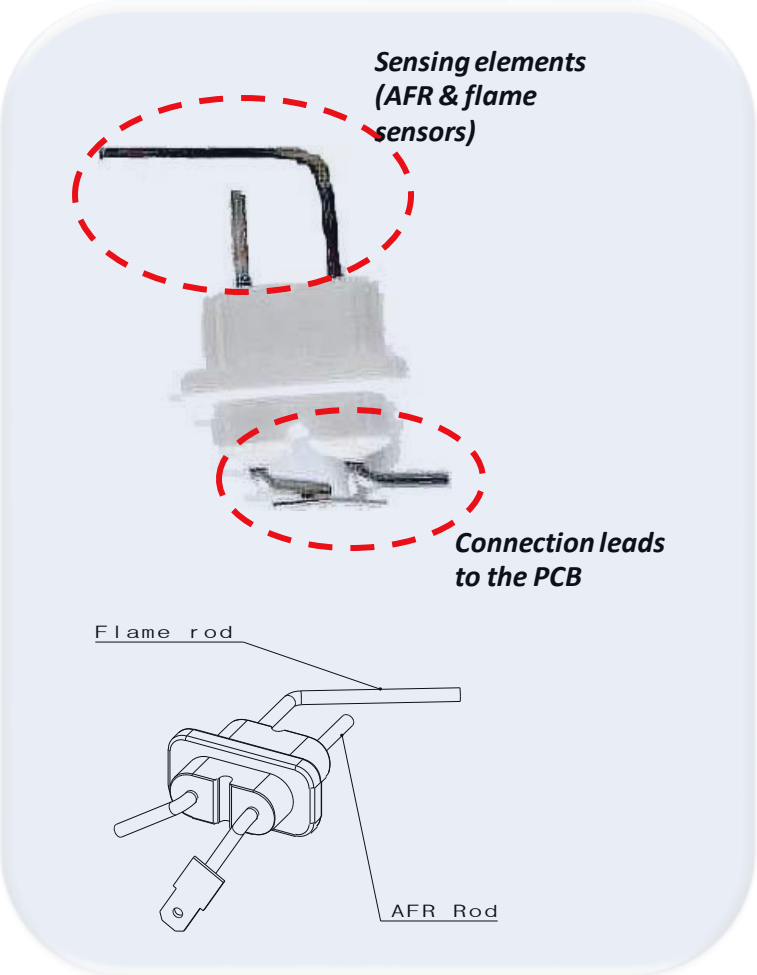

Flame Sensor

General modes of failure:

- No detection of flame when combustion has occurred.
- False detection of flame when no combustion has actually occurred.

Possible effects of failure:

- Water heater will stop operating

Basic diagnostics:

- Visual inspection of electrical connections: moisture, dust, connection/breakage of wires
- Electrical current check (Service Manual)

AFR Sensor

Air-Fuel Ratio sensor

Monitors combustion conditions within the chamber

When combustion conditions are less than ideal, computer adjusts fan motor speed to compensate

Also functions as a secondary flame sensor (verification)

Assembled with the flame sensor

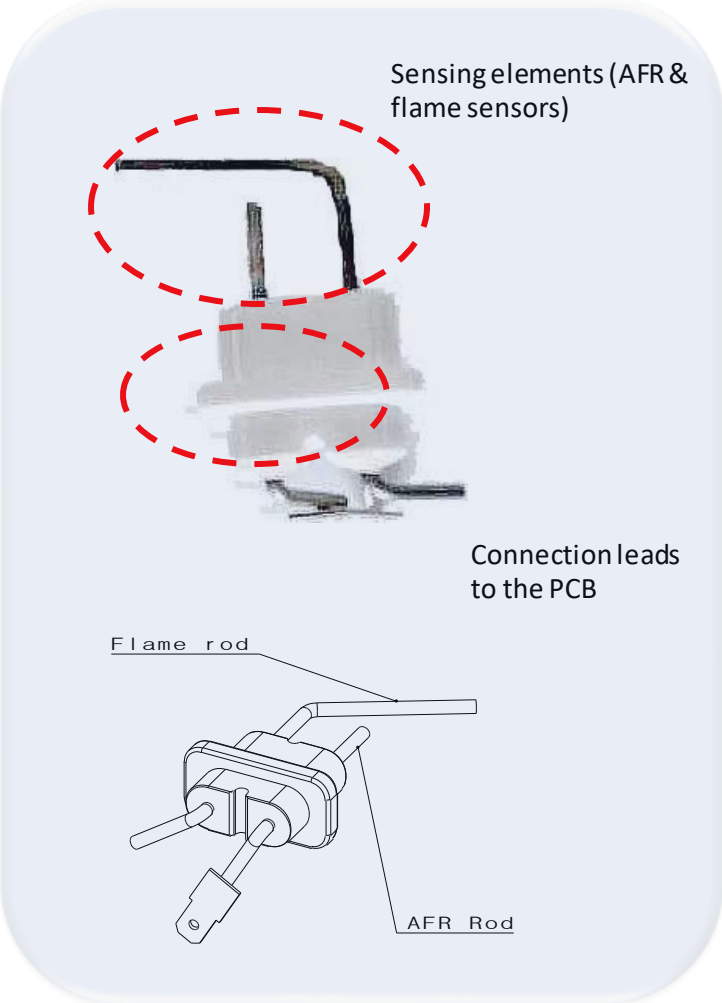

AFR Sensor

General modes of failure:

- No detection of flame when combustion has occurred.
- False detection of flame when no combustion has actually occurred.

Possible effects of failure:

- Water heater will stop operating
- Fan motor cannot adjust properly in response to abnormal combustion conditions.
- Improper combustion / high emissions

Basic diagnostics:

- Visual inspection of electrical connections: moisture, dust, connection/breakage of wires
- Electrical current check (Service Manual)

Primary Heat Exchanger

Absorbs heat from combustion

Transfers this heat into the water

Heat Exchanger

General modes of failure:

- Exhaust gas leakage
- Clogged heat exchanger fins
- Breach in drum walls
- Hard-water scale
- Heat stress
- Corrosion

Possible effects of failure:

- Copper damage due to heat stress
- Water leakage
- Poor heat transfer
- Abnormal combustion noise

Basic diagnostics:

- Visual inspection: soot, debris, cracks, water leakage, scale buildup, etc.

Secondary Heat Exchanger

Absorbs heat/exhaust from combustion

Transfers this heat into the water

Basic diagnostics:

- Visual inspection: soot, debris, cracks, water leakage, scale buildup, etc.

Flow Sensor

Detects and measures the water flow rate

Contains a spinning impeller and magnetic pickup

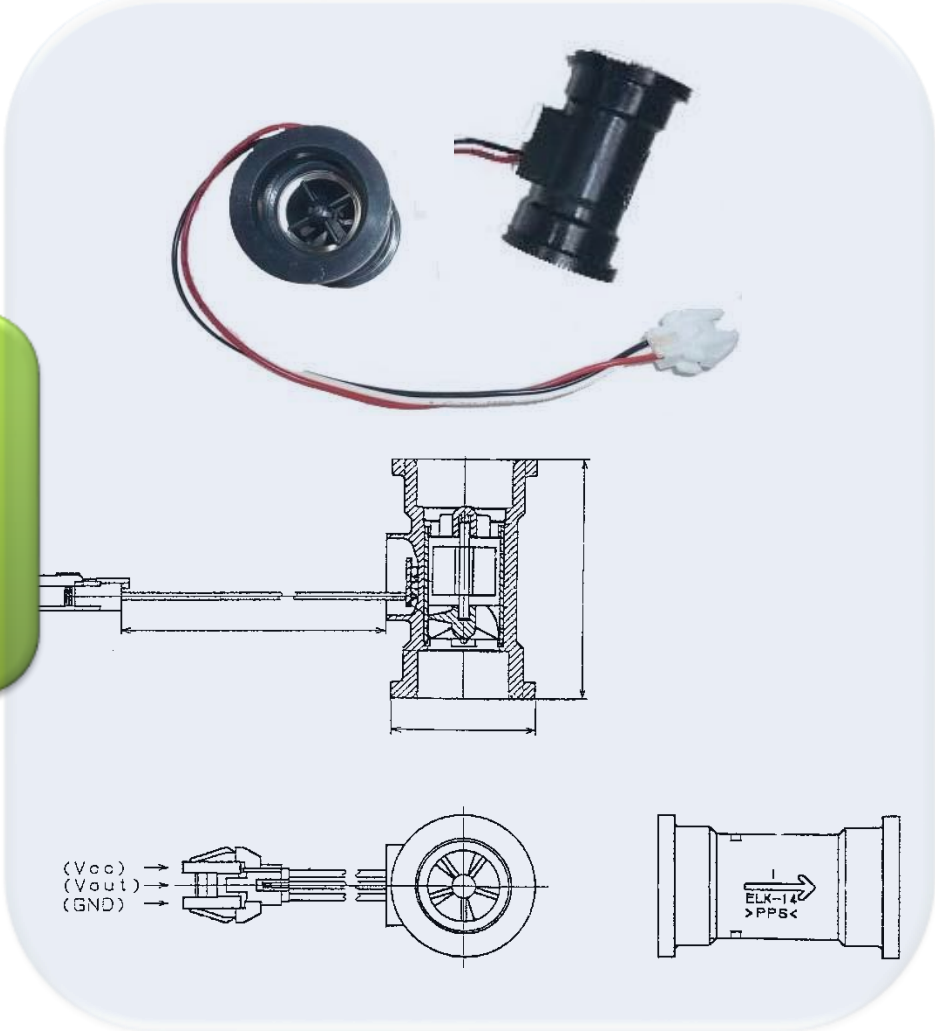

Flow sensor

General modes of failure:

- Impeller does not spin or spin freely: unable to detect or measure water flow.

Possible effects of failure:

- Startup ignition sequence will not initiate. Water heater will not operate.

Basic diagnostics:

- Visual inspection of electrical connections: moisture, dust, connection/breakage of wires
- Visual inspection of impeller for debris (any cause of restriction)
- Voltage check (Service Manual)

Water Control Valves

- Provides 3 functions within the water heater: flow adjustment, bypass, and two-way functions (540)
- Controls water flow to maintain proper output water temperatures (flow adjustment function)
- Mixes hot and cold water for proper output water temperatures (bypass function, 540 only)
- Prevents low-temperature corrosion from condensation in the heat exchanger (bypass function)
- Prevents water flow through the heat exchanger when water heater is not in operation (two-way function)

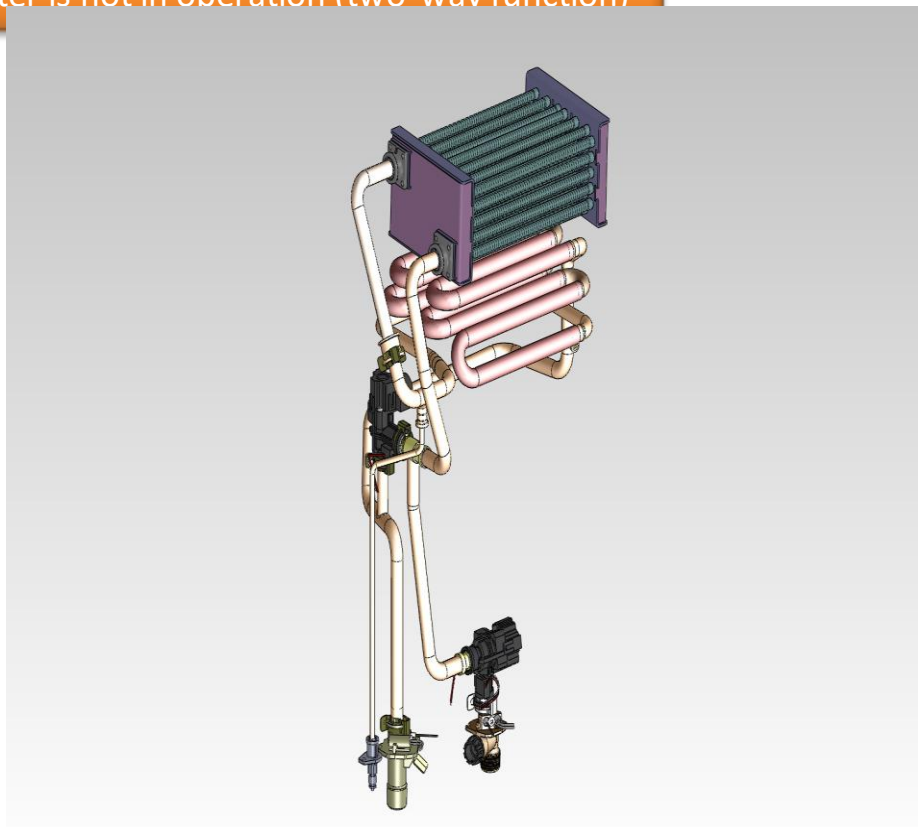

Water Control Valves

General modes of failure:

- Breach in valve housing, causing water leakage
- Inability to modulate flow or make fully opened/closed positions

Possible effects of failure:

- Water leakage can damage other components of the water heater
- Fluctuation in hot water output temperatures

Basic diagnostics:

- Visual inspection of electrical connections: moisture, dust, connection/breakage of wires
- Visual inspection of valves: motor drive locked due to scale buildup, breach in housing, etc.
- Voltage check (Service Manual)

Water Thermistors

Thermistors measure and help monitor water temperatures throughout the water heater

There are 3 (540) 240,340 have 2 water thermistors : one for the incoming cold water, one for the heat exchanger, and one for the output

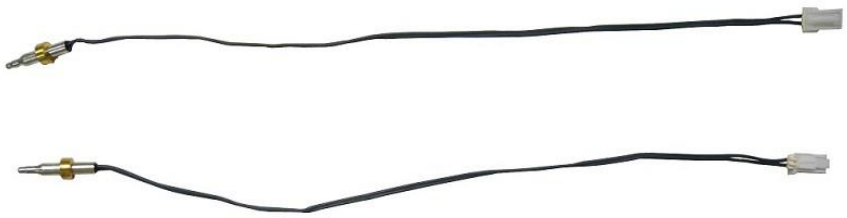

240/340 Thermitors

540 Thermistors

Thermistors

General modes of failure:

- Open circuit failure (no current) or electrical short (no resistance)
- Resistance values are off the calibrated values

Possible effects of failure:

- Water heater will not operate
- Fluctuation in hot water output temperatures

Basic diagnostics:

- Visual inspection of electrical connections: moisture, dust, connection/breakage of wires
- Visual inspection of thermistor: damage, buildup of debris or scale, etc.
- Resistance check (Service Manual)

Hi-limit switch

Detects excessively high water temperatures within the heat exchanger.

Upon detection, immediately cuts off all power to the gas valves.

Utilizes bi-metal thermal expansion

Manual reset switch

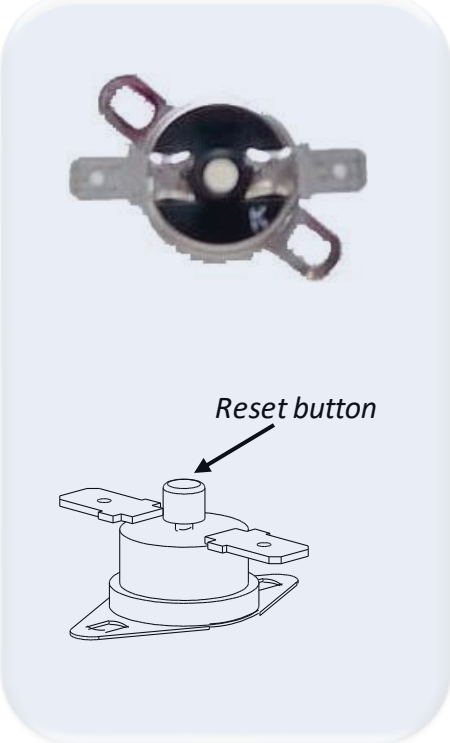

Hi-limit switch

General modes of failure:

- Open-circuit or closed-circuit failures

Possible effects of failure:

- In a closed-circuit failure, switch cannot detect high water temperatures. The thermistors will then act as backup hi-limit detectors until operation ends.
- If an open-circuit failure, water heater will not operate.

Basic diagnostics:

- Visual inspection of electrical connections: moisture, dust, connection/breakage of wires
- Visual inspection of the switch: position of the reset button (pressed or depressed)
- Possible buildup of scale within the heat exchanger.
- Voltage/resistance check (Service Manual)

Exhaust Safety Features

1 Thermistor, can get temp read out on controller 140°

1 Flat plate high limit, automatic reset 151°

Protects temps for getting over 140°

If one fails, system will read an error, and unit will shut down

Exhaust Thermistor

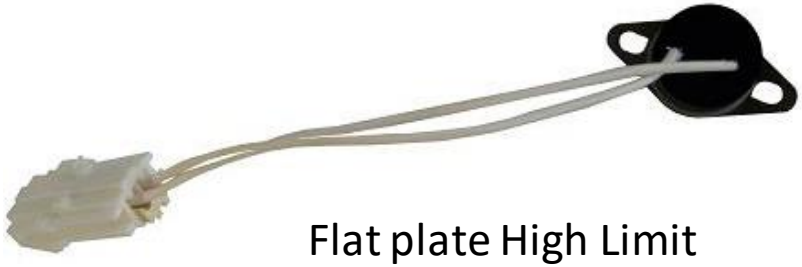

Flat plate High Limit

Overheat Cutoff Fuse

Detects excessive temperatures around the heat exchanger and combustion chamber.

Upon detection, immediately cuts off all power to the gas valves.

Fuse contains solder, with a melting point of 430°F.

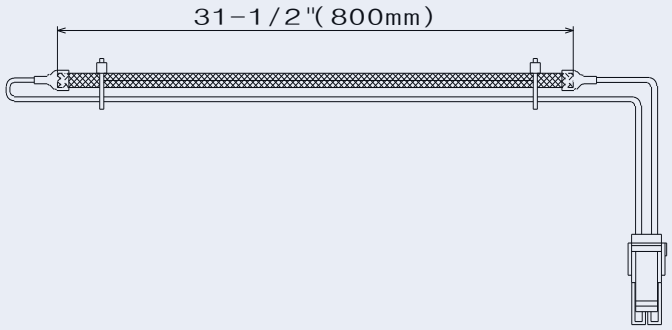

Overheat Cutoff Fuse

General modes of failure:

- Open-circuit or closed-circuit failures

Possible effects of failure:

- In a closed-circuit failure, excessive heat can cause a breach in the walls of the heat exchanger or combustion chamber.
- In an open-circuit failure, water heater will not operate.

Basic diagnostics:

- Visual inspection of electrical connections: moisture, dust, connection/breakage of wires
- Voltage/resistance check (Service Manual)

Freeze-Protection Thermostat

Senses ambient air temperatures and activates the freeze-protection ceramic heaters when necessary

Ceramic heaters activate when the thermostat senses temperatures below 36.5°F

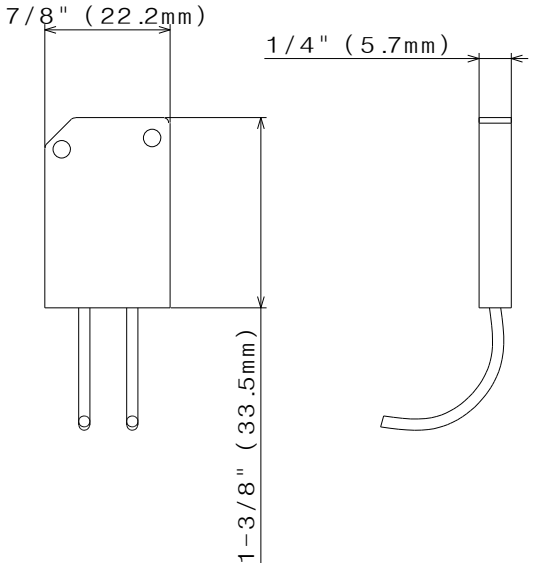

Freeze-Protection Ceramic Heaters

The ceramic heaters prevent water within the water heater from freezing during non-operation. Freezing causes water to expand and can rupture the heat exchanger and other components

The ceramic heaters are located throughout the water heater along the water pathways

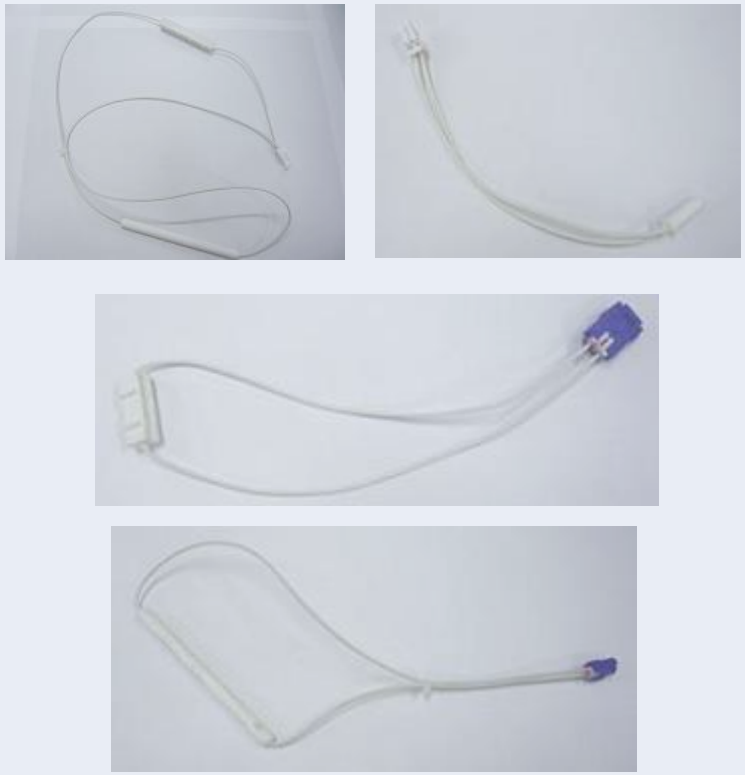

Freeze-Protection Ceramic Heaters

General modes of failure:

- Open-circuit failures: ceramic heaters do not receive the voltage needed to heat up

Possible effects of failure:

- Freezing cannot be prevented, heat exchanger may burst from excessive pressure.

Basic diagnostics:

- Visual inspection of electrical connections: moisture, dust, connection/breakage of wires
- Voltage/resistance check (Service Manual)

Computer Board

Controls most of the functions of the water heater

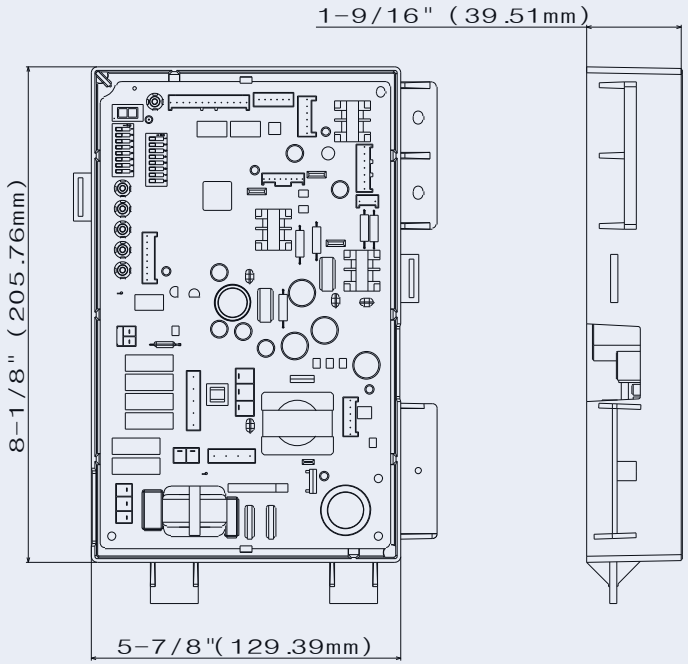

Computer Board

General modes of failure:

- Computer board malfunction

Possible effects of failure:

- Lack of proper combustion control during operation
- Inability to detect signals from numerous sensors
- Lack of water temperature control
- Error in self-diagnostics
- No communication between heaters or with the controller in a multiple-unit manifold system.
- General abnormal responses

Basic diagnostics:

- Visual inspection of electrical connections: moisture, dust, connection/breakage of wires
- Visual inspection of PCB e.g. burn marks or brown spots

Igniter

Creates a spark to ignite the air/fuel mixture within the combustion chamber during activation

The output voltage of the igniter exceeds 14 kV.

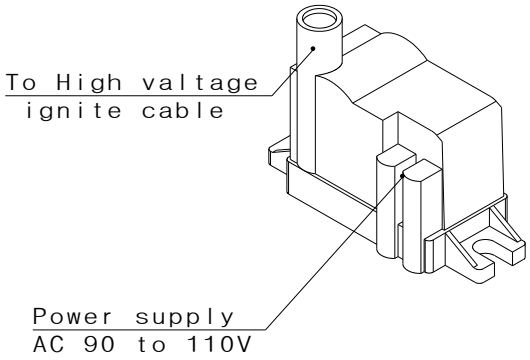

Igniter

General modes of failure:

- Unable to create a spark (or adequately strong spark) during activation
- Continually creates sparks i.e. before, during, and after operation.

Possible effects of failure:

- Without ignition, water heater will not operate
- Durability of igniter will decrease

Basic diagnostics:

- Visual inspection of electrical connections: moisture, dust, connection/breakage of wires
- Observe spark condition: strong, blue, & solid vs. weak.
- Voltage check (Service Manual)

Freeze-Protection Thermostat

General modes of failure:

- Closed-circuit failure
- Open-circuit failure

Possible effects of failure:

- In a closed-circuit failure, ceramic heaters will always remain on, providing excessive heat in the long term.
- In an open-circuit failure, the water heater's freeze-protection system will never activate, causing damages associated with freezing water

Basic diagnostics:

- Visual inspection of electrical connections: moisture, dust, connection/breakage of wires
- Visual inspection of thermostat body
- Voltage check (Service Manual)

Fuse Box

Protects water heater from high voltage and/or current caused by lightning or other electrical spikes or surges

Fuse box contains two surge absorbers: Absorber A activates when voltages exceed 220 volts. Absorber B activates when voltages exceed 680 volts.

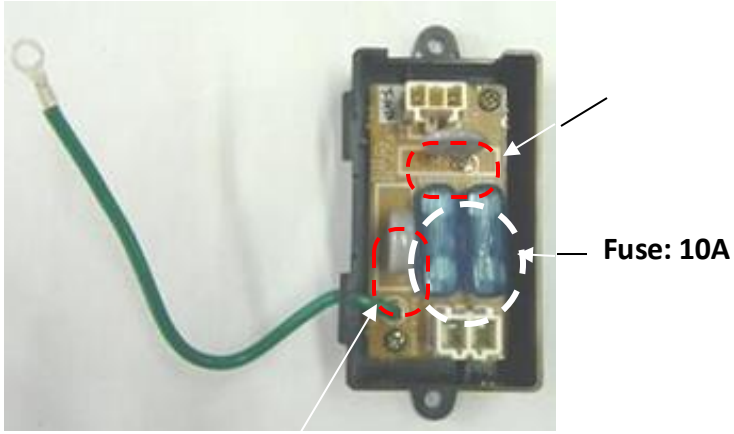

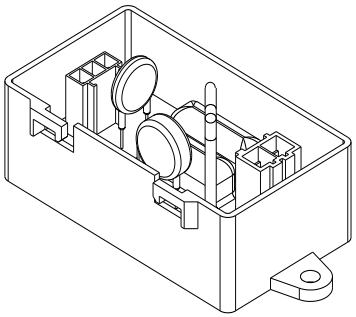

Fuse Box

General modes of failure:

- Short-circuit failure of absorber
- Open-circuit failure of absorber and/or fuse

Possible effects of failure:

- In a short-circuit failure of the absorber, the fuse will blow out and the water heater will not operate.
- Inability to protect the computer board in the event of high-voltage surges. A damaged board will stop all water heater operations.

Basic diagnostics:

- Visual inspection of electrical connections: moisture, dust, connection/breakage of wires
- Visual inspection: burn marks on the components
- Voltage check (Service Manual)

Installation Requirements

BASIC INSTALLATION REQUIREMENTS

- **Specifications:** Always size gas line for maximum BTU rating for your heater or heaters.

- **Gas:** ¾" – 1" ID Gas Line Minimum, Use BTU Chart

- **Water:** Treated water to extend the lifespan of heat exchanger

- **Water connections:** ¾" -1" recommended with isolation valves. Recommended 30 ~ 80 psi water pressure

- **Electrical:** 120VAC Electrical Supply, No dedicated or GFI circuit needed
(check with local codes)

- **Make Up Air:** Clean combustible air supply recommended

- **Cat. III Stainless Steel Only**, Exhaust Vent Pipe on Non-Condensing Units

Gas

-Natural Gas Supply Piping-

Maximum Delivery Capacity of Cubic Feet of Gas per Hour of IPS Pipe Carrying Natural Gas of 0.60 Specific Gravity Based on Pressure Drop of 0.5" WC

Based on Energy Content of 1,000 BTU/Cubic Ft.: The water heater requires 140 Cubic Ft./hr for the 110 models, 190 Cubic Ft./hr for the 310 models, and 199 Cubic Ft./hr for the 510 models.

Unit: Cubic Feet per Hour

Pipe Size	Length in Feet												
Inches	10'	20'	30'	40'	50'	60'	70'	80'	90'	100'	125'	150'	200'
¾"	363	249	200	171	152	138	127	118	111	104	93	84	72
1"	684	470	377	323	286	259	239	222	208	197	174	158	135
1 ¼"	1,404	965	775	663	588	532	490	456	428	404	358	324	278
1 ½"	2,103	1,445	1,161	993	880	798	734	683	641	605	536	486	416
2"	4,050	2,784	2,235	1,913	1,696	1,536	1,413	1,315	1,234	1,165	1,033	936	801

-Propane (LP) Supply Piping-

Maximum Capacity of Propane (LP) Based on 11" WC supply pressure at a 0.5" WC pressure drop

Unit: kBTU per Hour

Pipe Size	Length in Feet												
Inches	10'	20'	30'	40'	50'	60'	70'	80'	90'	100'	125'	150'	200'
¾"	567	393	315	267	237	217	196	185	173	162	146	132	112
1"	1,071	732	590	504	448	409	378	346	322	307	275	252	213
1 ¼"	2,205	1,496	1,212	1,039	913	834	771	724	677	630	567	511	440
1 ½"	3,307	2,299	1,858	1,559	1,417	1,275	1,181	1,086	1,023	976	866	787	675
2"	6,221	4,331	3,465	2,992	2,646	2,394	2,205	2,047	1,921	1,811	1,606	1,496	1,260

For more information, please see the below.

Use National Fuel Gas code chart for pipe capacities (NG and LP WC)

Water Quality

Water Quality

- Hard water will shorten the life of the heater
  - Residential: 7 grains/gal (120 ppm) max
  - Commercial: 4 grains/gal (70 ppm) max
- Isolation Valves are recommended
- Flushing/Descaling
  - Not the answer to hard water, but does help to extend the heat exchanger life

Normal Heat Exchanger Tubes

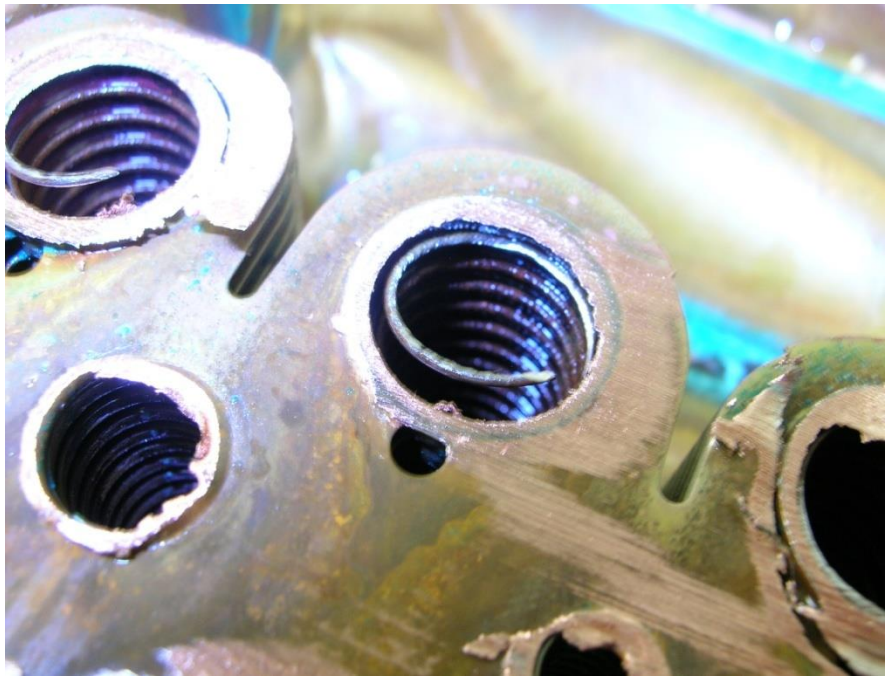

Used heat exchangers on soft water; no signs of hard water scaling.

- No signs of copper turning black from heat stress
- Minimal signs of exterior corrosion. Blue-green color from condensation not a concern

Normal Heat Exchanger Fins

Used heat exchangers: Bottom view. Both are considered relatively clean. Right photo has low levels of dust accumulated in the center.

- No signs of copper turning black from heat stress
- Dust on fins can cause performance and reliability problems, but would not be a factor in causing leaks.

Hard Water Scaling

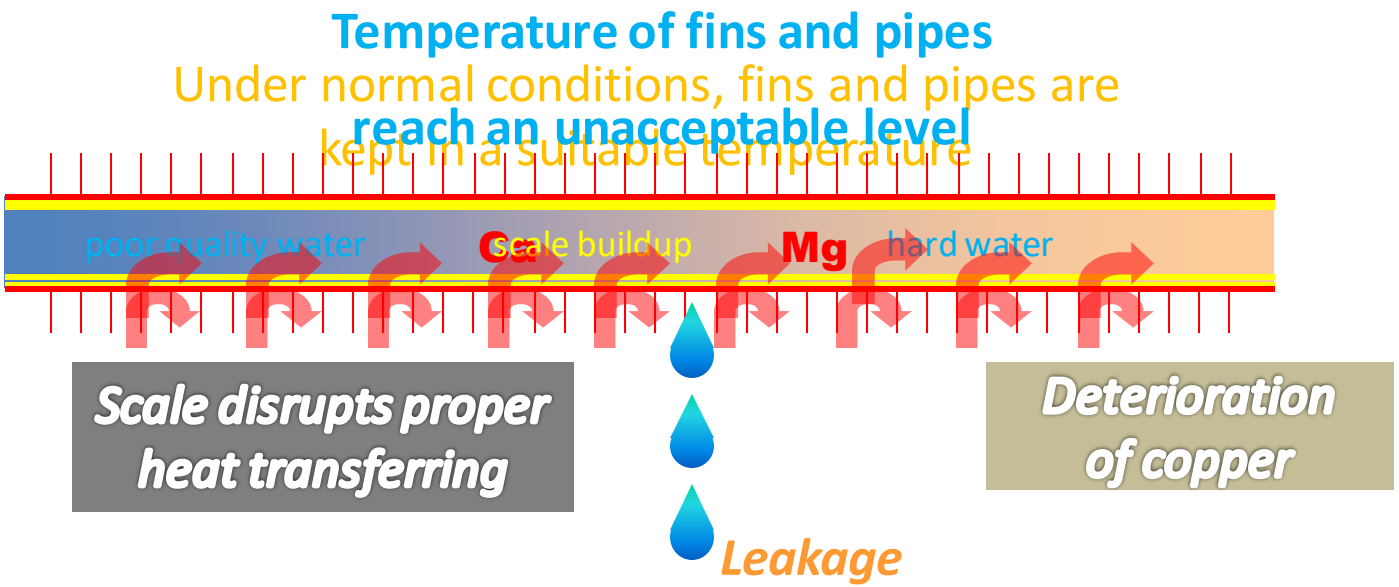

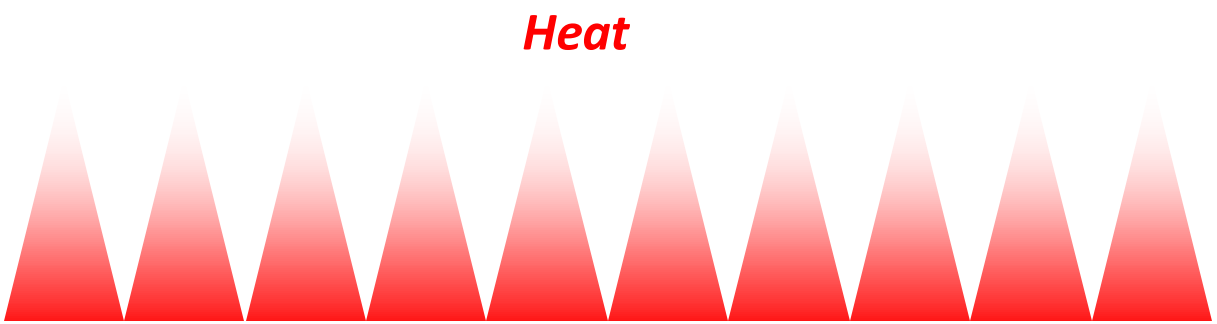

Water Quality

Hard Water Damage

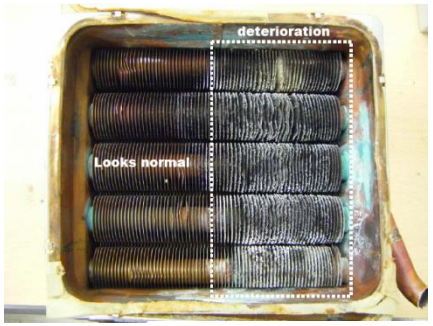

Recirculation System on Hard Water

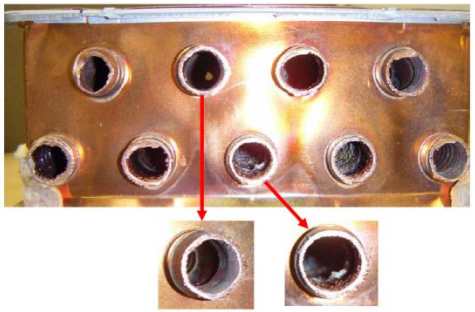

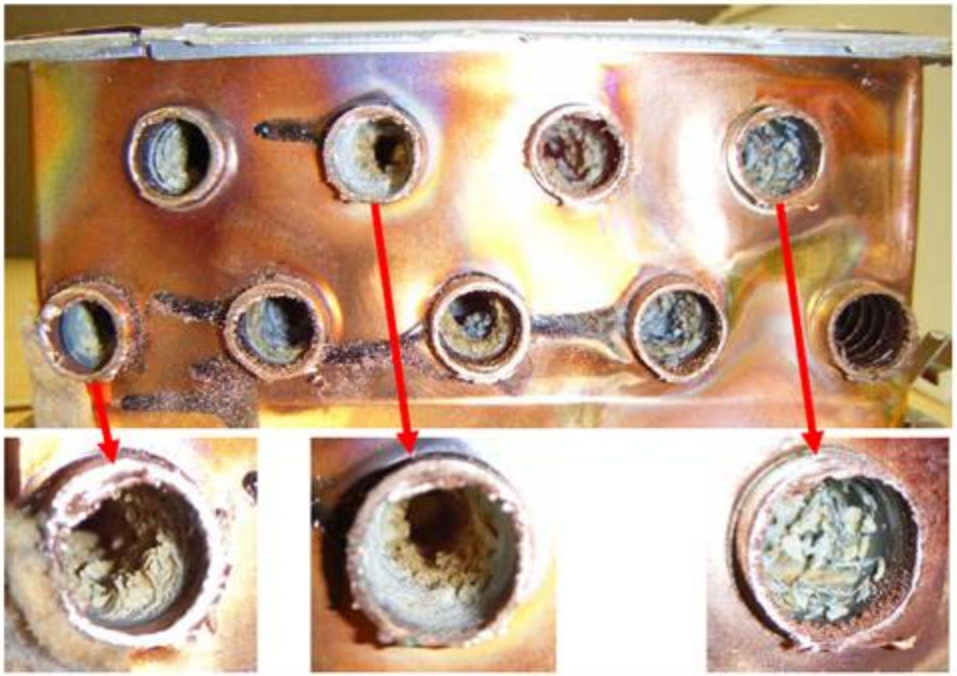

Bottom of Heat Exchanger

Used heat exchanger with signs of hard water scaling definitely evident from scale formation of the tubes on the fins.

- Signs of copper turning black from heat damage in the left photo is probably severe hard water scaling; on the right photo, it is probably moderate hard water scaling.
- The black discoloring of the fins is severe. This black discoloring can be seen on the bottom and top of the heat exchanger (external).

Severe Scale Build Up (example)

Used heat exchanger with severe signs of scale buildup

- Signs of copper turning black from heat damage. The amount of scale buildup is evident.
- The black discoloring of the fins is severe. This black discoloring can be seen on the bottom and top of the heat exchanger (external).

Product Preservers®

Anti-Scale System

Product Overview

Product Preservers Anti-Scale Filter is a better solution for tankless water heaters because it prevents scale buildup in the first place:

- The filter promotes formation of inactive scale crystals which flow through the water heater without sticking to the heat exchanger.
- The filter does not add chemicals to the water or require electricity.
- It is virtually maintenance free, only requiring a simple filter change every two years.

Product Specifications

Connection Size	3/4” NPT
Minimum Flow	.5 gpm
Maximum Flow	10 gpm
Minimum Pressure	15 psi
Maximum Pressure	100 psi
Minimum Temperature	35° F

Install on cold water lines only

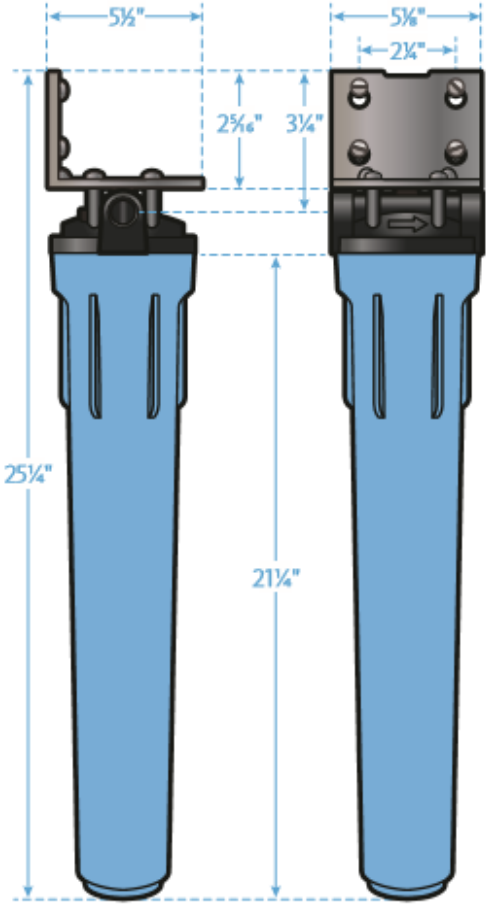

Installation

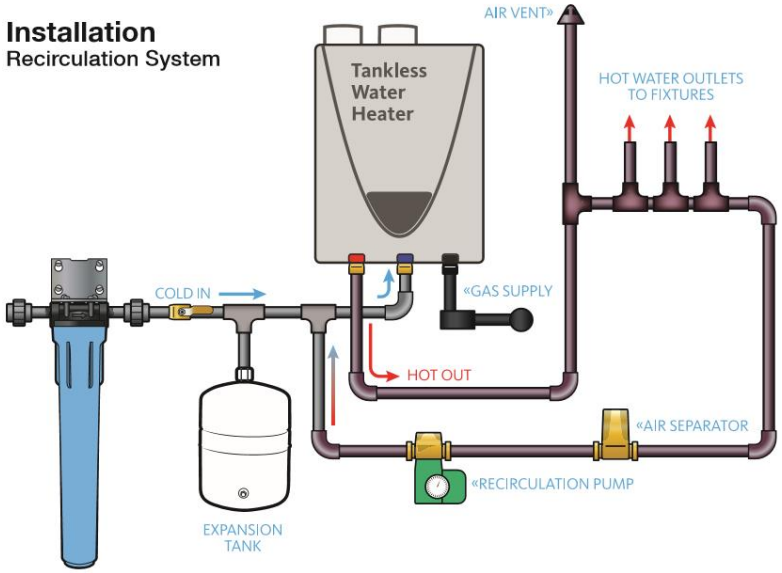

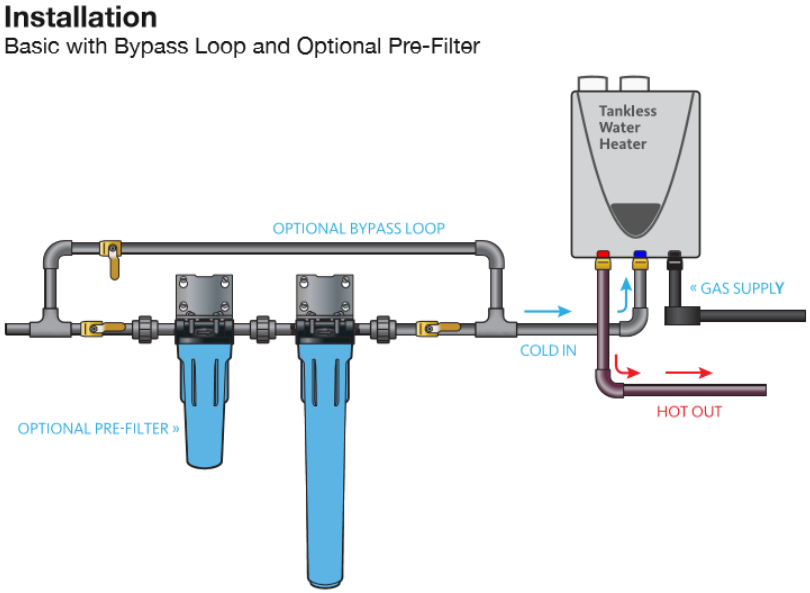

Note installation date for replacement element scheduling.

Cartridge Replacement

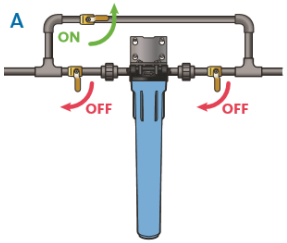

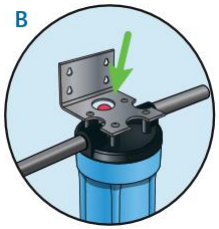

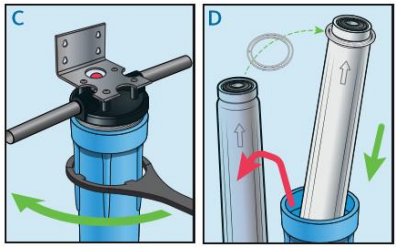

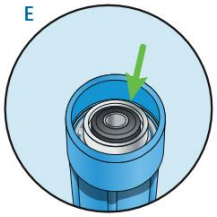

1. Replace element at least once every years to ensure proper operation.
2. Determine if equipment connected to your Product Preservers System must be turned off before shutting off water.
3. If bypass line is installed, bypass system during filter change. Open bypass valve, close unit inlet valve, and close unit outlet valve. **Figure A**
4. If no bypass line is installed, turn off feed water.
5. Release pressure to system by pressing red button on top of unit. **Figure B**
6. Unscrew housing sump using included wrench if necessary. **Figure C**
7. Discard old cartridge. Retain spacer. **Figure D**
8. Insert new cartridge into sump. Re-use the spacer that was included with the original unit. **Figure D**
9. Inspect O-ring for any damage and replace if necessary. **Figure E**
10. Re-install filter housing sump. HAND TIGHTEN ONLY.
11. Pressurize system by slightly opening feed valve. Once pressurized, open valve fully. Inspect seals for any leaks. If there is a leak, you may tighten the sump slightly more with the wrench.
12. Flush system for 2 minutes with drain valve open. If no drain valve is installed, disconnect from equipment for flush cycle.
13. Turn on all equipment connected to system.
14. Record filter change date for replacement element scheduling.

Warranty

Limited Warranty

Company warrants its Product Preservers® Anti-Scale System as follows:

- The Product Preservers® cartridge system is warranted to be free of defects in materials and workmanship for **two years** from the date of original shipment.
- Product Preservers® filter cartridges are warranted for performance for a period of two years from the date of original installation when installed and operated in accordance with the instructions in the corresponding Installation and Operation Manual.

Severe Scale Build Up (example)

Used heat exchanger with severe signs of scale buildup

- Signs of copper turning black from heat damage. The amount of scale buildup is evident.
- The black discoloring of the fins is severe. This black discoloring can be seen on the bottom and top of the heat exchanger (external).

Electrical Requirements

Electricity

Electrically grounded, but not to the water or gas piping

AC 120V 60 Hz Supply

On/Off switch or pigtail

Surge protector recommended

Back-up power supply is recommended in areas with frequent outages

Connect power supply: 120VAC 60Hz

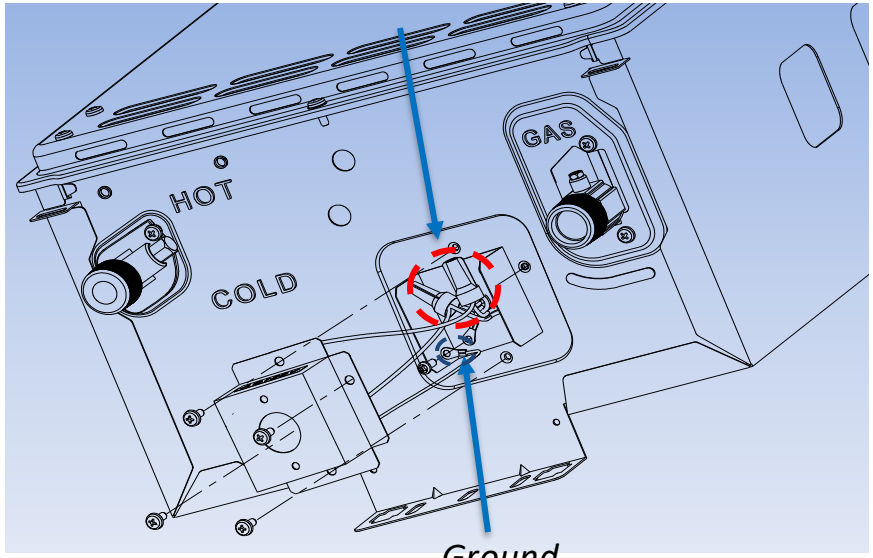

Ground

Make up Air / Quality

Make up Air

Make-up air volume (Non-DV indoor installations)

- Air drawn from indoors – 1 in^2 per 1,000 BTU/h
- Air drawn from outdoors – 1 in^2 per 4,000 BTU/h

Water heater size	When drawing make-up air from outside the building	When drawing make-up air from inside the building (from other rooms within)
MAX 199,000 BTU	49.8 Sq. IN	199 Sq. IN
	When combustion air is supplied from outside the building, an opening communicating directly with the outside should have a minimum free area of one square inch per 4,000 BTUH input of the total input rating of water heater in the enclosed area.	When combustion air is supplied from inside the building, an opening communicating with the rest of the dwelling should have a minimum free area of one square inch per 1,000 BTUH input of the total input rating of water heater in the enclosed area. This opening should never be less than 199 sq. in.

Example: Minimum recommended air supply opening size for the 510 model

Make-Up Air

Make-up air quality (Non-DV indoor installations)

If you will be installing the unit in a contaminated area with a high level of dust, sand, flour, aerosols or other contaminants/chemicals, they can become airborne and enter and build up within the fan and burner causing damage to the unit. In those environments (e.g. residential or commercial laundry facilities, hair salons, pet salons, chemical plants etc.), please purchase a tankless model that is direct-vent convertible. Direct venting allows the water heater to draw fresh intake air from the outside.

Make-Up Air

Other Ways to Vent a Two-Pipe System

Vertical Concentric Termination System

Two penetrations through the wall or roof

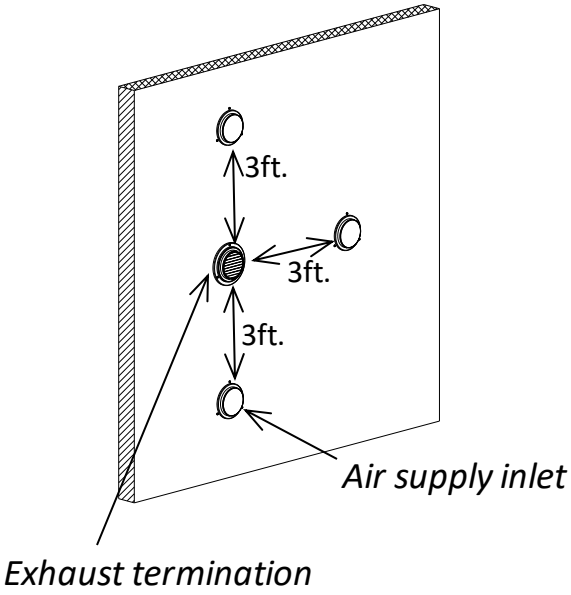

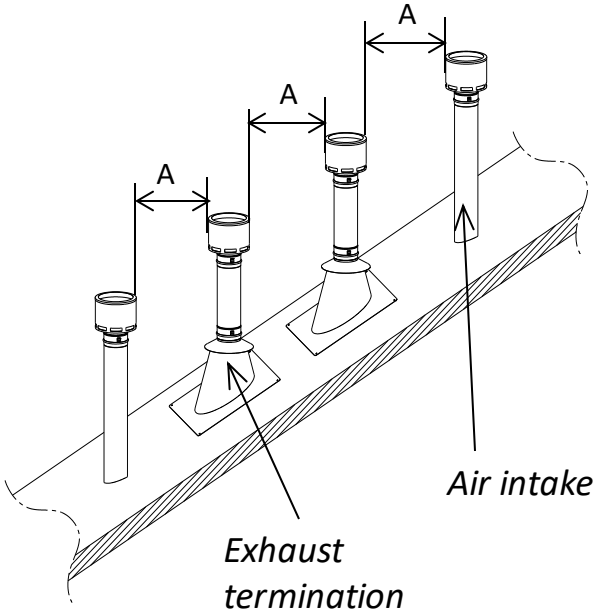

(Always follow local codes)

Venting Options

Condensing Single Pipe

-Single pipe with room-air intake illustrations-

Typical installations using PVC, ABS, or polypropylene vent

Horizontal Installation

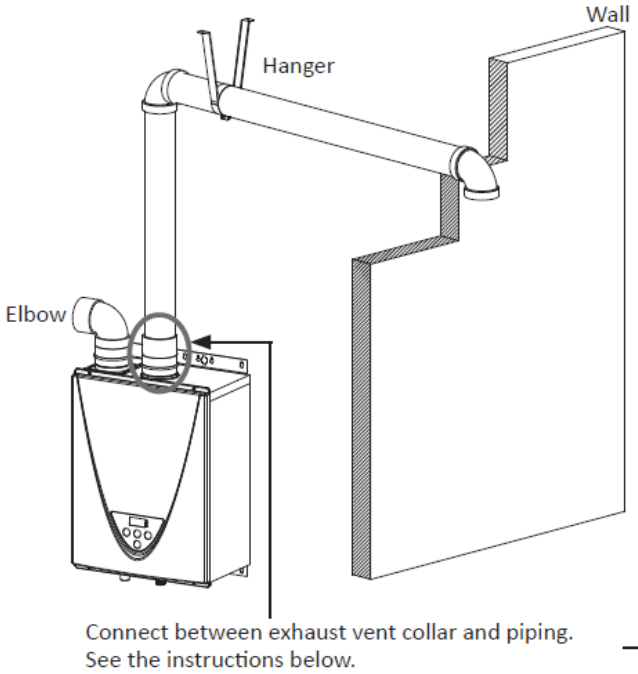

Vertical Installation

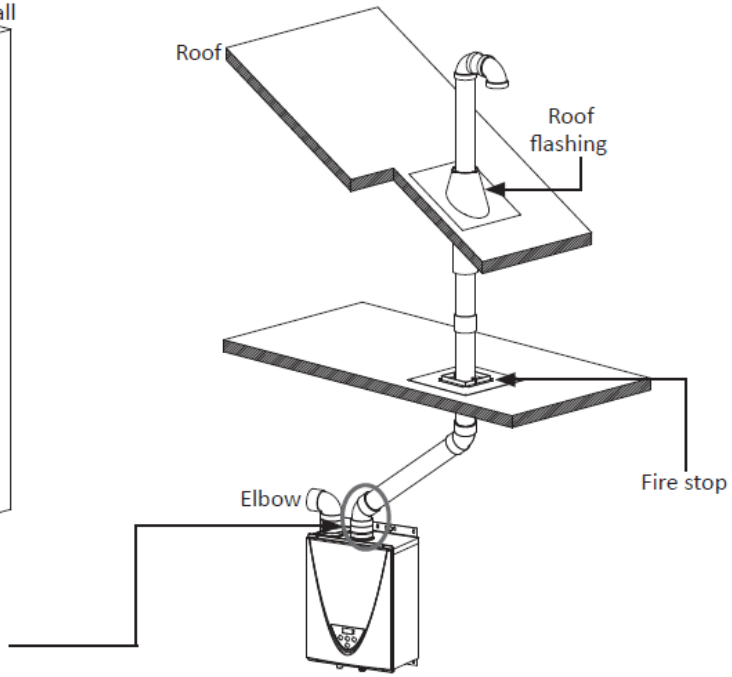

Condensing Two Pipe

Typical installations using <u>PVC, ABS, or polypropylene vent</u>

Horizontal Installation

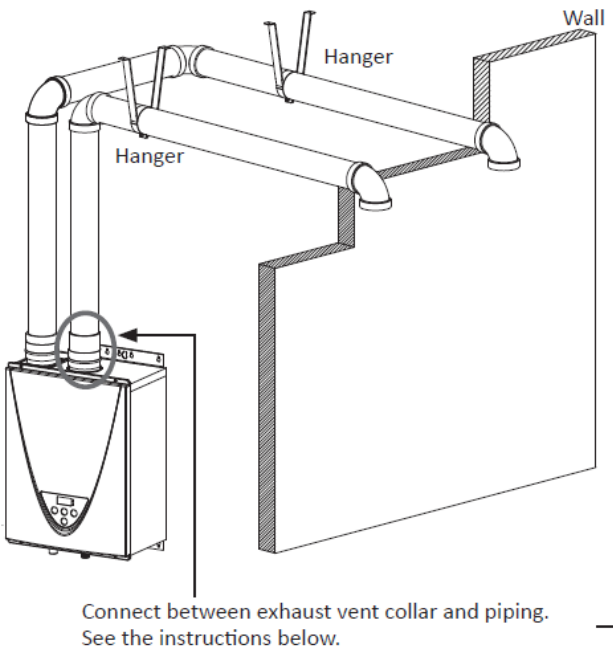

Vertical Installation

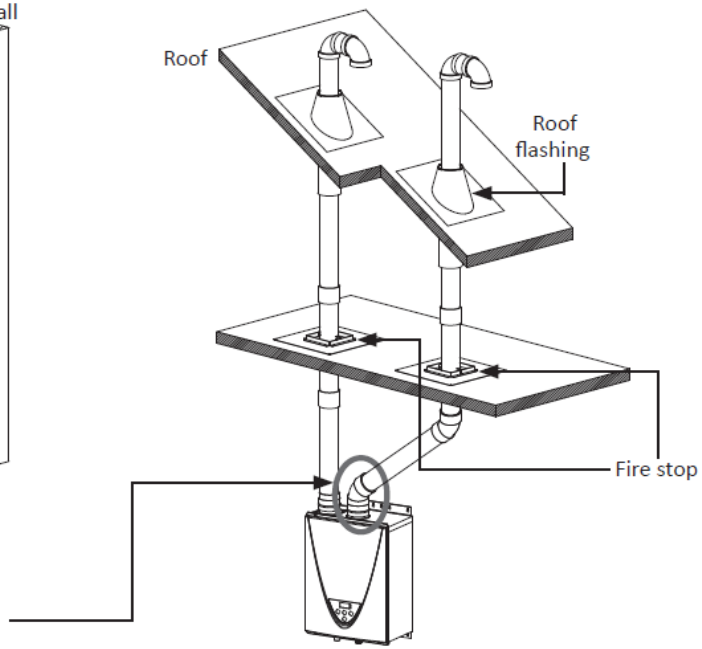

Condensing Common Vent

Typical common-vent installation examples

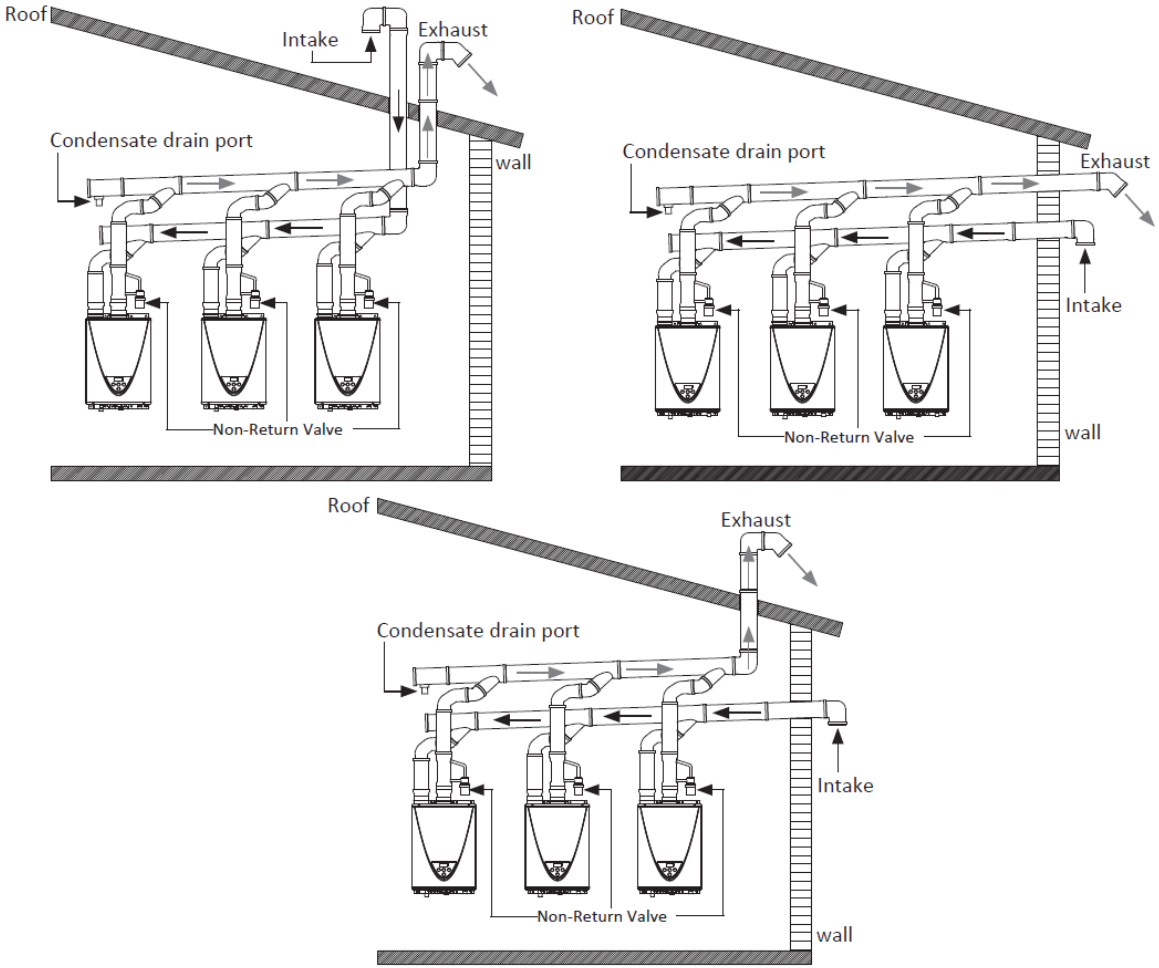

For details on the installation of a common-vent system, please refer to the vent manufacturer's instructions.

Non-Condensing Stainless Venting

Horizontal Installation Diagram

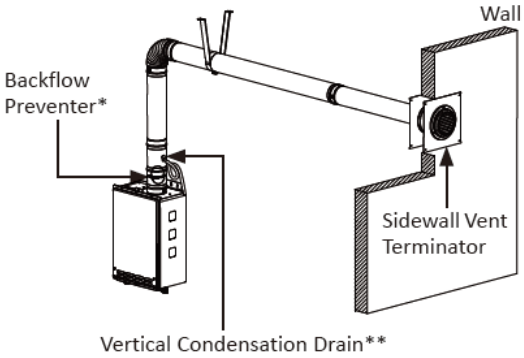

Vertical Installation Diagram

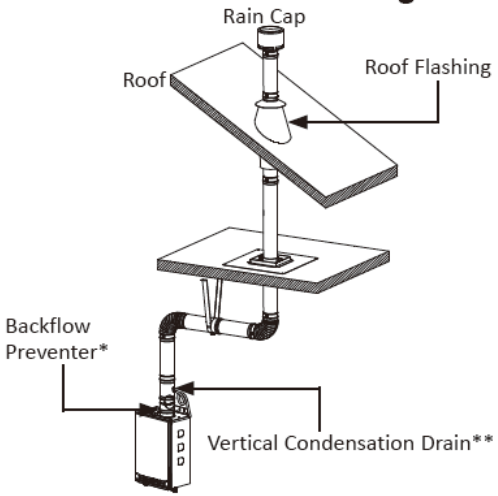

Horizontal Installation Diagram (With direct-venting)

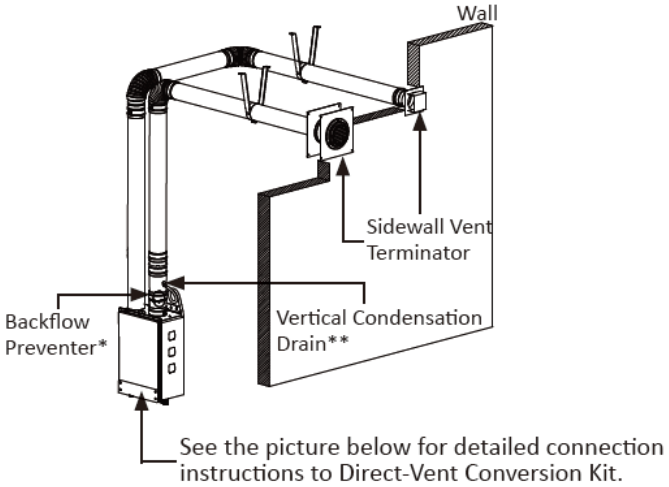

Vertical Installation Diagram (With direct-venting)

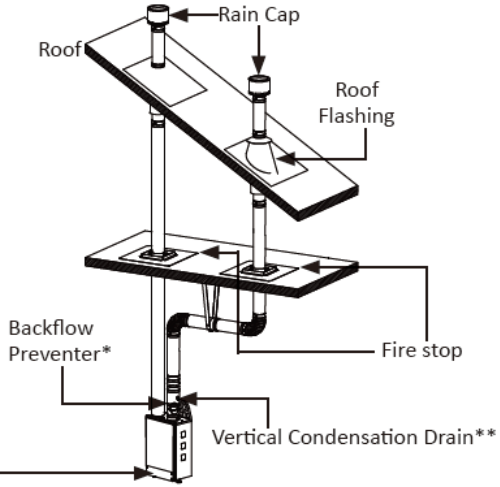

Non-Condensing Concentric Venting

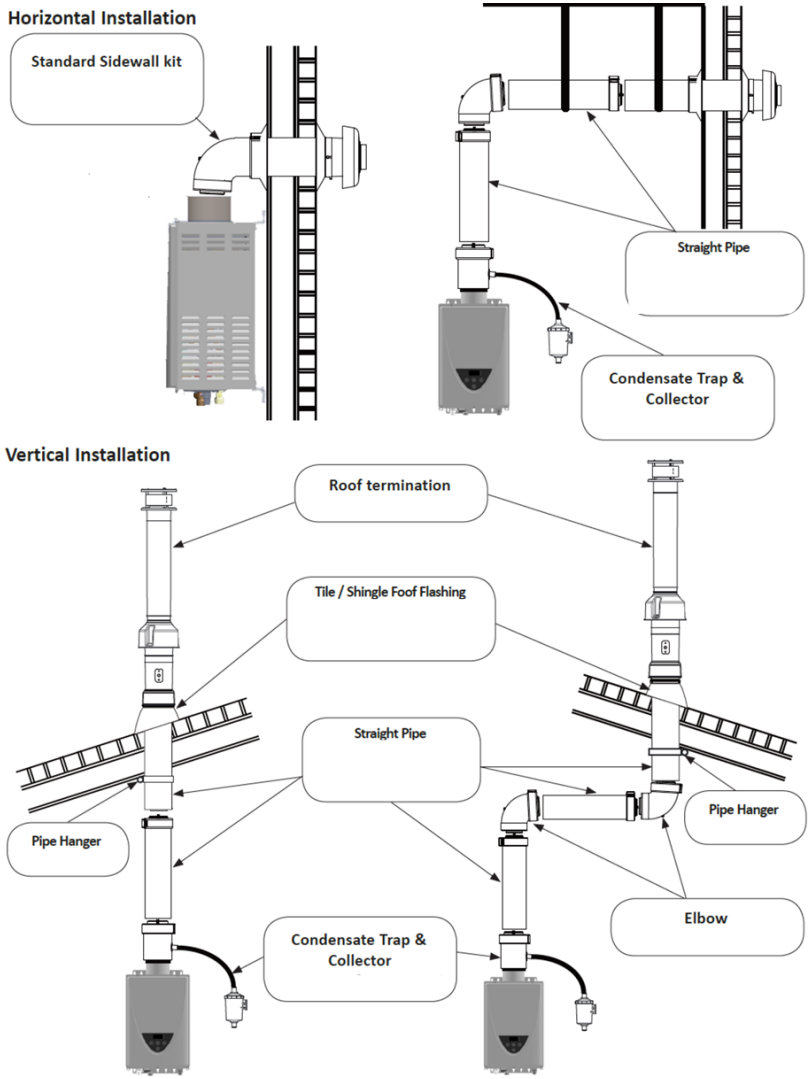

BASIC SIZING

Product Selection Guide

- To select the right unit or multiple units for a home, three factors are of critical importance…
  - Incoming ground water temperature
    - Will determine the amount of “temperature rise” required to achieve the desired hot water outlet temperature
  - Set-point temperature
    - Standard factory setting is 120°F or 122°F, but some applications may require lower or higher temperature settings
  - Peak hot water demand
    - How much hot water the home will need during its peak demand

Incoming Water Temperature

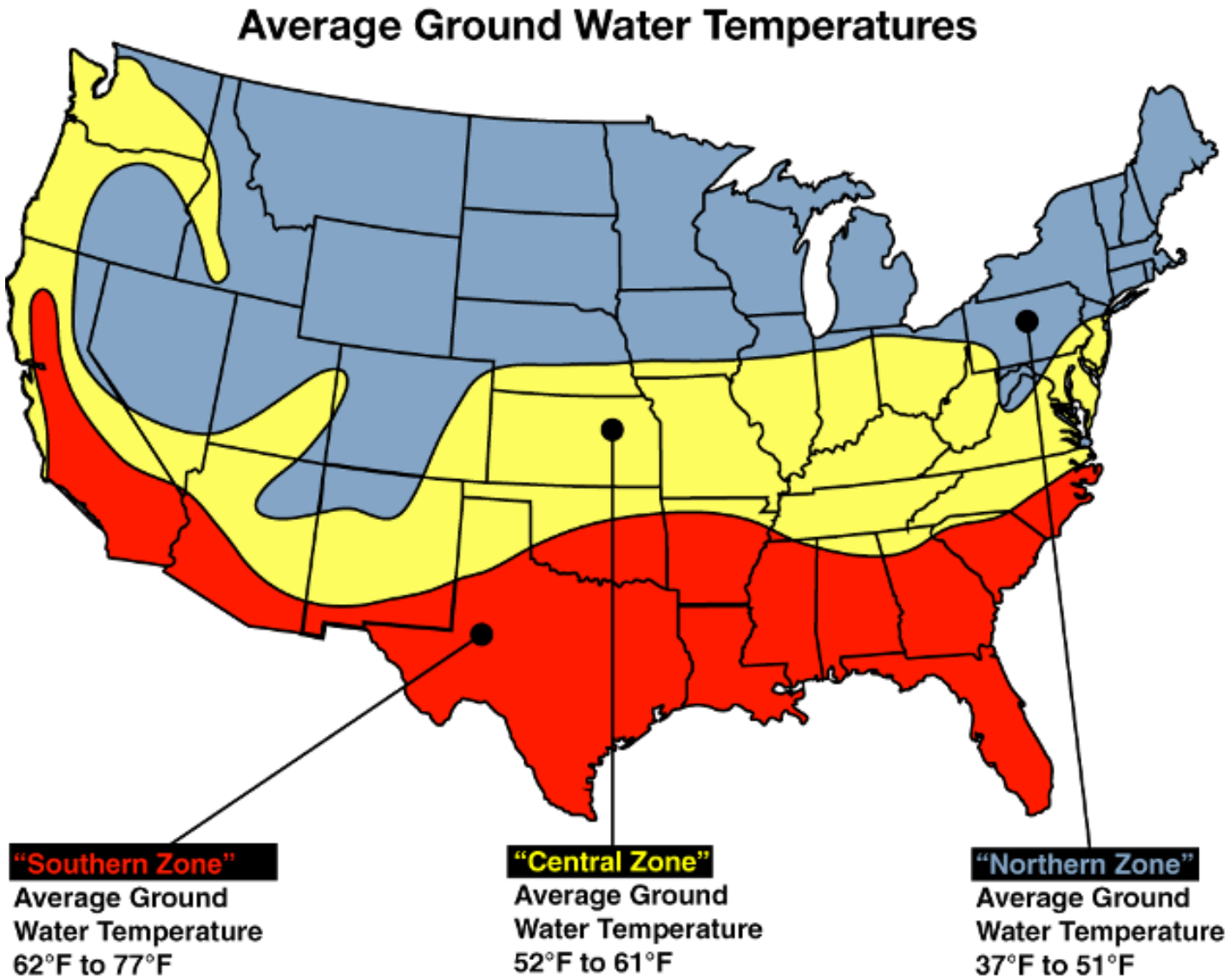

Flowrate Guide

Temperature Rise vs. Gallons per Minute

Temp Rise	110/U Series	310/U Series	510/U Series	240H Series	340H Series	540H Series	710 Series	910 Series
30°	6.6	8.0	10.0	6.6	8.0	10.0	9.0	14.5
35°	6.6	8.0	9.3	6.6	8.0	10.0	9.0	14.5
40°	5.7	7.8	8.1	6.6	8.0	9.5	9.0	14.5
45°	5.1	6.9	7.2	6.6	7.6	8.4	8.5	13.5
50°	4.6	6.2	6.5	6.1	6.8	7.6	7.7	12.2
55°	4.2	5.7	5.9	5.5	6.2	6.9	7.0	11.1
60°	3.8	5.2	5.4	5.1	5.7	6.3	6.4	10.1
65°	3.5	4.8	5.0	4.7	5.3	5.8	5.9	9.4
70°	3.3	4.4	4.7	4.3	4.9	5.4	5.5	8.7
75°	3.1	4.1	4.3	4.1	4.6	5.0	5.1	8.1
80°	2.9	3.9	4.1	3.8	4.3	4.7	4.8	7.6
85°	2.7	3.7	3.8	3.6	4.0	4.4	4.5	7.2
90°	2.5	3.5	3.6	3.4	3.8	4.2	4.3	6.8
95°	2.4	3.3	3.4	3.2	3.6	4.0	4.0	6.4
100°	2.3	3.1	3.3	3.0	3.4	3.8	3.8	6.1

Flow rate is determined by Temperature Rise. To determine your temperature rise, subtract the incoming water temperature from the set output temperature. All units are factory set to 120 or 122°F but can be changed.

Install Example

Luxury Home

Master Shower System (12 GPM)

5 Standard Showers (12 GPM)

2 Kitchens (6 GPM)

Total Possible Demand (30 GPM)

Owner Estimated Demand (20 GPM)

Hot/Cold Mix Ratio of 70/30

70% of 20 GPM = 14 GPM @ 122° F

Installed (2)910s ***(via Easy Link!)***

- Production Capability in the Midwest: 16 GPM @ 122° F

Larger Applications

Application designers/engineers can decide whether to size for full flow, expected flow, or utilize probability models such as the Hunter Curves.

For large-scale applications such as hotels, apartment complexes, and large restaurants, Hunter Curves are commonly used to estimate the peak flow rate demand when given the total amount of fixture units within an application.

It is up to the application designer/engineer to determine the amount of fixture units within any given application.

We are always willing to assist when sizing large-scale applications. Please contact Tankless Technical Support for assistance.

Example of Hunter Curves for Sizing Large Applications

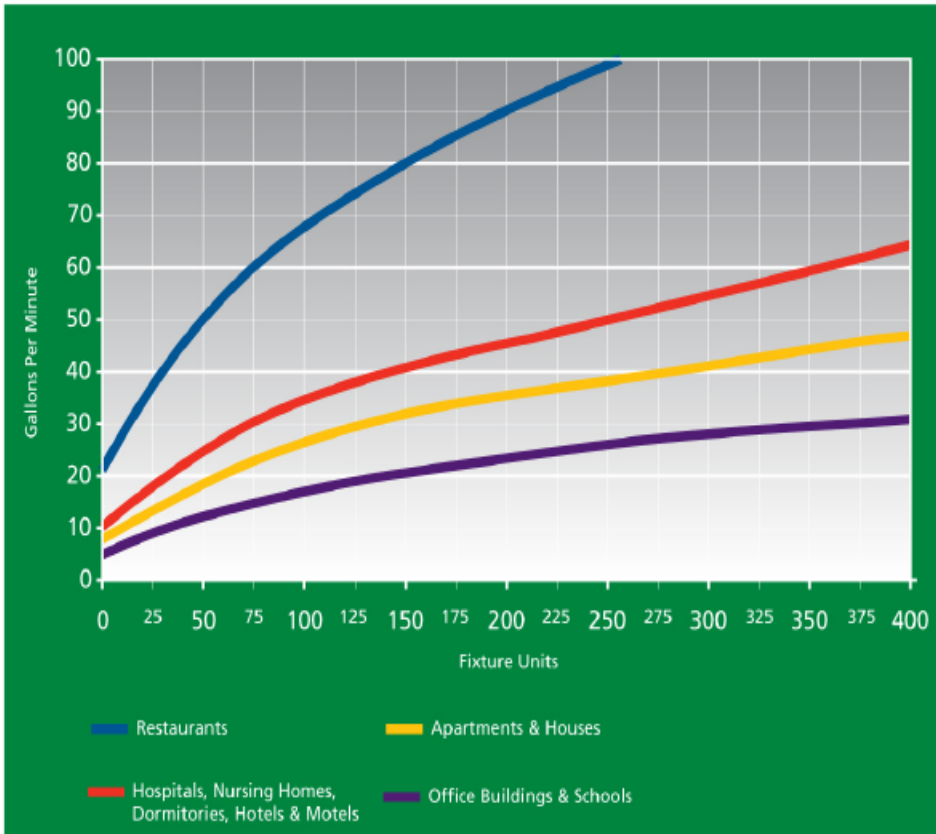

Comparison of Flow Rates vs. Temperature Rise

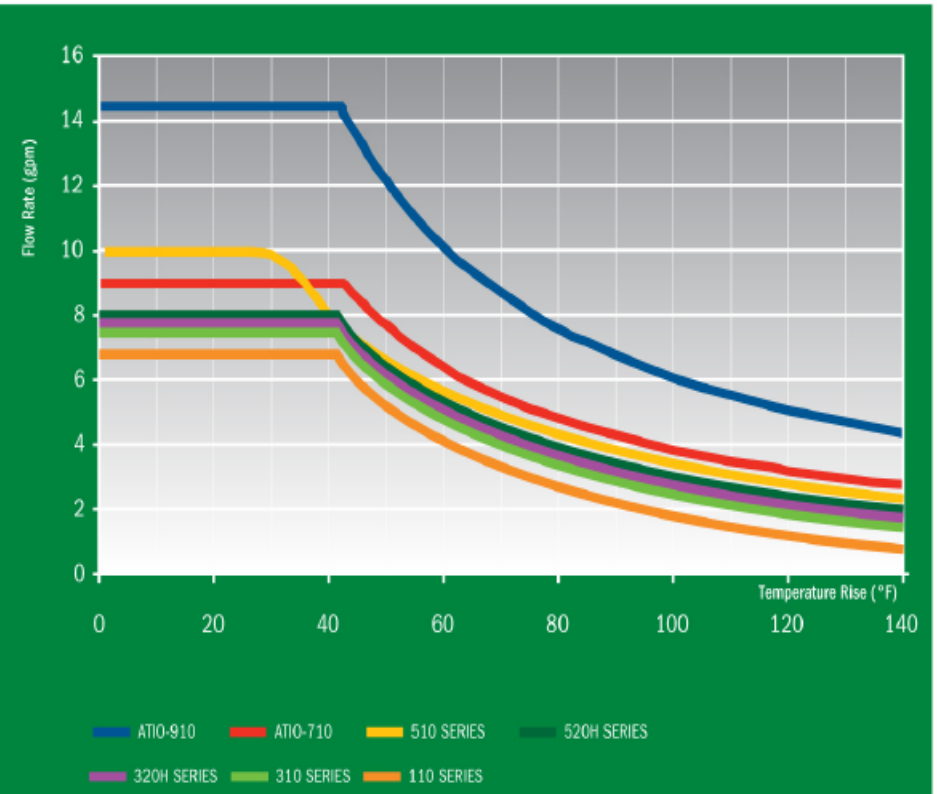

Tankless Applications

- ***Domestic Hot Water Systems:***
  From an Apartment with a Single Shower, Washer, or Dishwasher to Luxury Homes with Multiple Showers, Spas, and Washers

- ***Radiant Floor Heating Systems: (Check Local Codes For "H" Stamp)***
  This is fast becoming the preferred method of heating. Tankless is an excellent heat source!

- ***Laundromats, Health Clubs, Beauty Salons*, Etc:***
  ** Note: Beauty Salons must have direct vent or source of fresh air.*

- ***Solar Hot Water Systems:***
  With Tankless Back-up for Heating or DHW or Both!
  Our heaters work great with Solar!

- ***Restaurants and Hotels:***
  We can custom size the installation to every need.

- ***Storage Tank Systems for Increased dump loads***

Maintenance

Contaminant-free

If the water heater is installed in a contaminated area with a high level of dust, lint, sand, grease, aerosols, or other contaminants, they can become airborne and enter into the air intake. The contaminants will build up within the fan and burner assembly causing abnormal flame conditions due to lack of combustion air, damaging many components of the unit.

In order to prevent the need for frequent maintenance, it is suggested that the area around the water heater is kept dust or debris-free. In poor environments where air quality cannot be improved, it is suggested that the water heater be direct-vented (if the water heater model is convertible).

Flame/AFR sensor

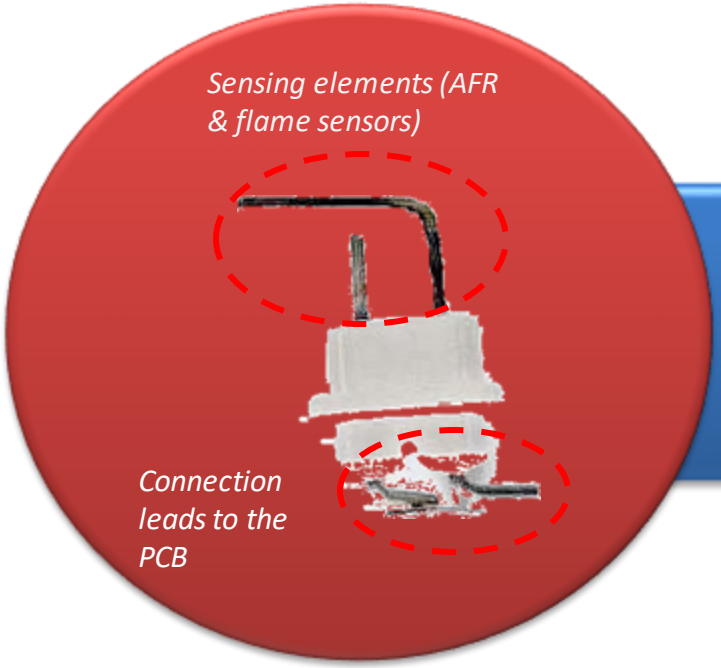

In dirty or dusty environments, the flame sensor can become coated up with black soot. This coating prevents electrical current from the flame sensor to travel to ground.

Fine-grit sandpaper can be used to polish the flame/AFR sensor. The sensor must be cleaned to a bright finish.

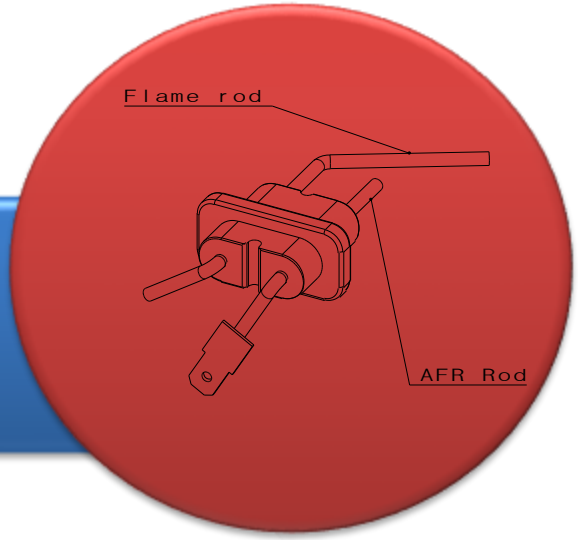

Burner cleaning

Dirty flame/AFR sensors also indicate that the burner may be too dirty. A dirty burner can possibly cause a number if different error codes such as 101, 111, 121, and 991.

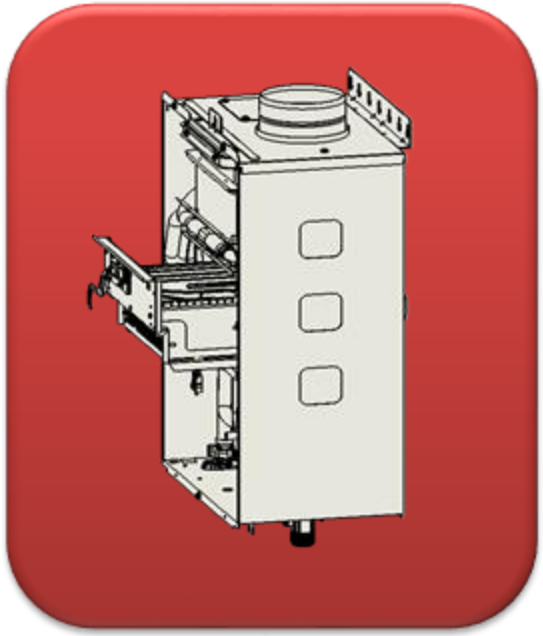

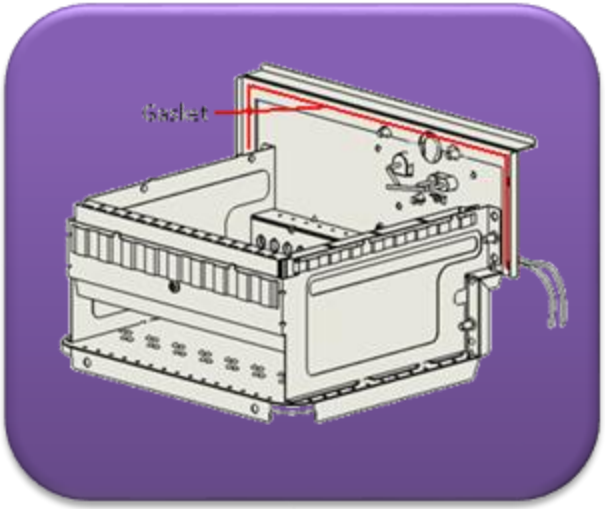

Many times, compressed air is not enough. In these cases, use orange clean, simple green, or other safe degreasers. Take care not to damage the burner gaskets during the cleaning process.

Fan and combustion chamber

While cleaning the burner, inspect the combustion chamber and fan motor. Dust may have built up on these components as well. Clean with compressed air and a towel.

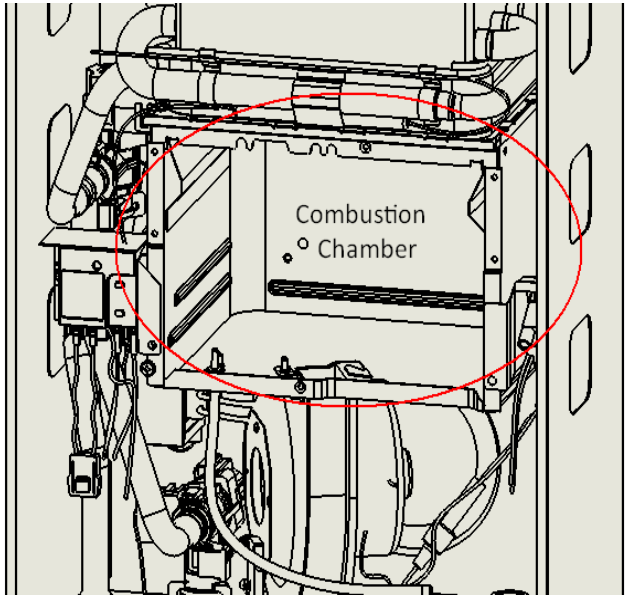

Heat exchanger replacements

In the case of damaged or leaking heat exchangers, replacement will be needed.

It is important to be careful during the removal and replacement process. Follow all steps carefully. Refer to Takagi's heat exchanger replacement instructional videos for assistance.

Draining and inlet filter

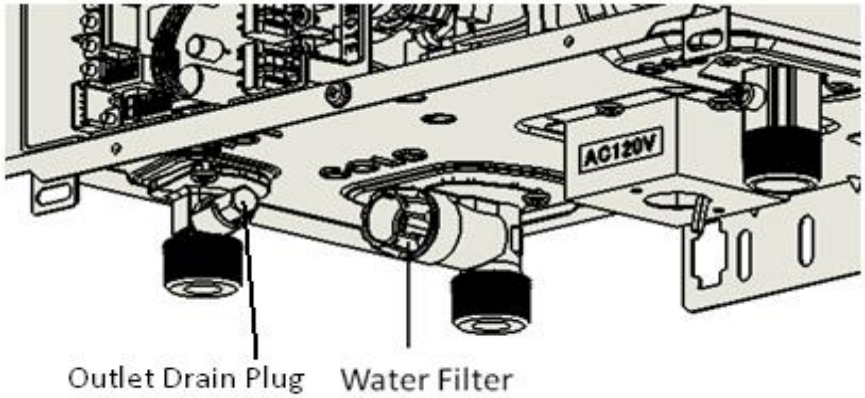

Over time, the inlet filter may get clogged from debris. A dirty/clogged inlet filter can cause numerous issues e.g. loss of pressure, temperature fluctuations, etc.

To clean the filter, close all shut off valves and drain the water heater. Remove the filter and clean with a small brush.

If the water heater will not be in use for a long duration and is installed in a freezing environment, the water heater must be properly drained in order to avoid freeze damage.

Descaling/Flushing

Hard water is a severe problem for the copper coils inside the heat exchanger. Scale buildup tends to occur very readily at high temperatures, sometimes causing the heat exchanger to fail within a very short time. Heat exchanger failure due to scale buildup from hard water conditions is NOT covered by warranty.

A water softener or effective form of scale inhibitor should be installed on the cold water line before the water heater. Preventing scale buildup is highly preferred over descaling/flushing.

By the time flushing or descaling is performed on a water heater, irreversible damage may have already been done to the heat exchanger.

De-Scaling/Flushing

In cases where it is already too late to inform the customer about the benefits of water softening or scale inhibitors, and flushing is needed, use only weak acid based solutions e.g. food-grade citric acid, food-grade phosphorus acid, white vinegar etc.

Use of our accessory isolation valve kits are recommended for easier maintenance.

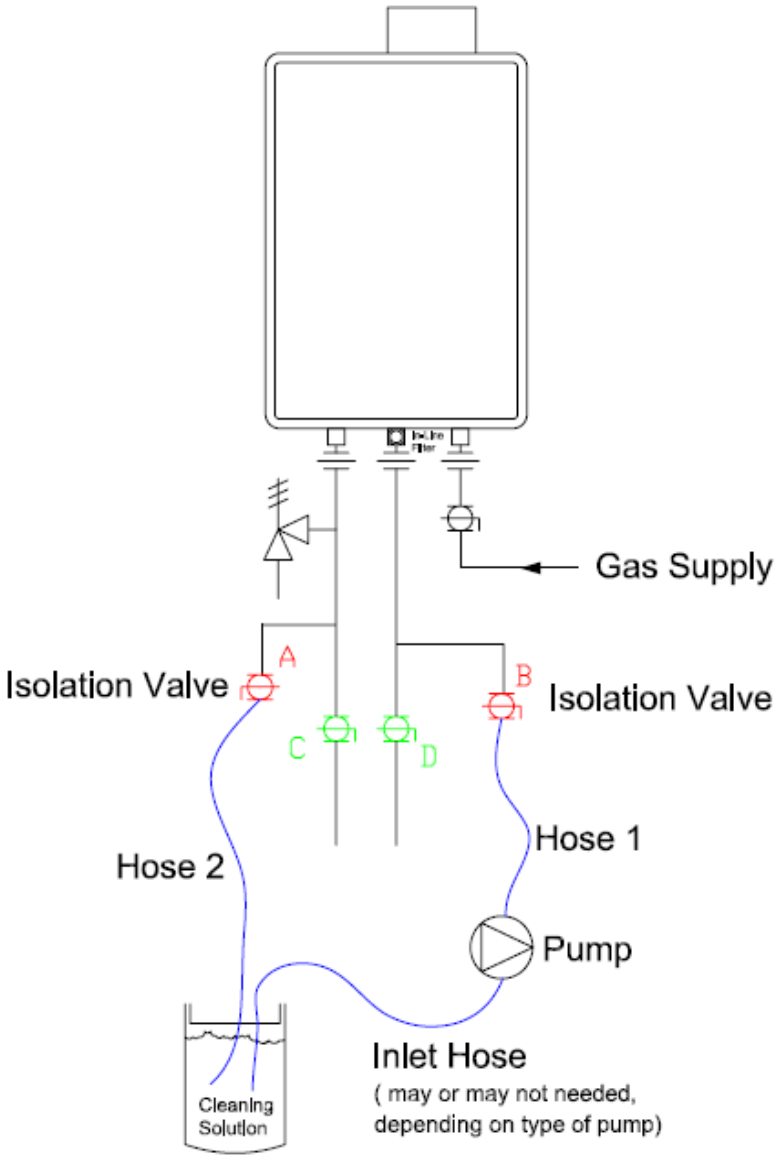

Advantages

SAVES SPACE

:Before:

After:

Roughly the size of carry-on luggage and the unit mounts high on a wall.

SAVES SPACE

SAVES SPACE

SAVES ENERGY

Typical Energy Factor (EF) Range:

Tank Type (40 to 75 gal.)

.53 to .64

Tankless

.81 to .95

Energy Star 2012 Minimum

Tank: 0.62

Tankless: 0.82

Savings Increase: 32.3%

32.3%

Definition

Overall energy efficiency based on the amount of hot water produced per unit of fuel consumed over a typical day.

Factors include:

-Recovery Efficiency

-Standby Losses

-Cycling Losses

SAVES ENERGY

Typical Annual Operating Costs Range:

Tank Type

$1.00/therm = $220 to $283

$1.50/therm = $330 to $424

Tankless

$1.00/therm = $143 to $186

$1.50/therm = $214 to $279

Savings
30% to 50%
Annually
$120 to
$210

STEADY TEMPERATURE

Temperature Drop: Typical 50 gal. Tank-type
Power Vent Model vs. T-K3
(2 x 2.5 GPM showers at 105° F)

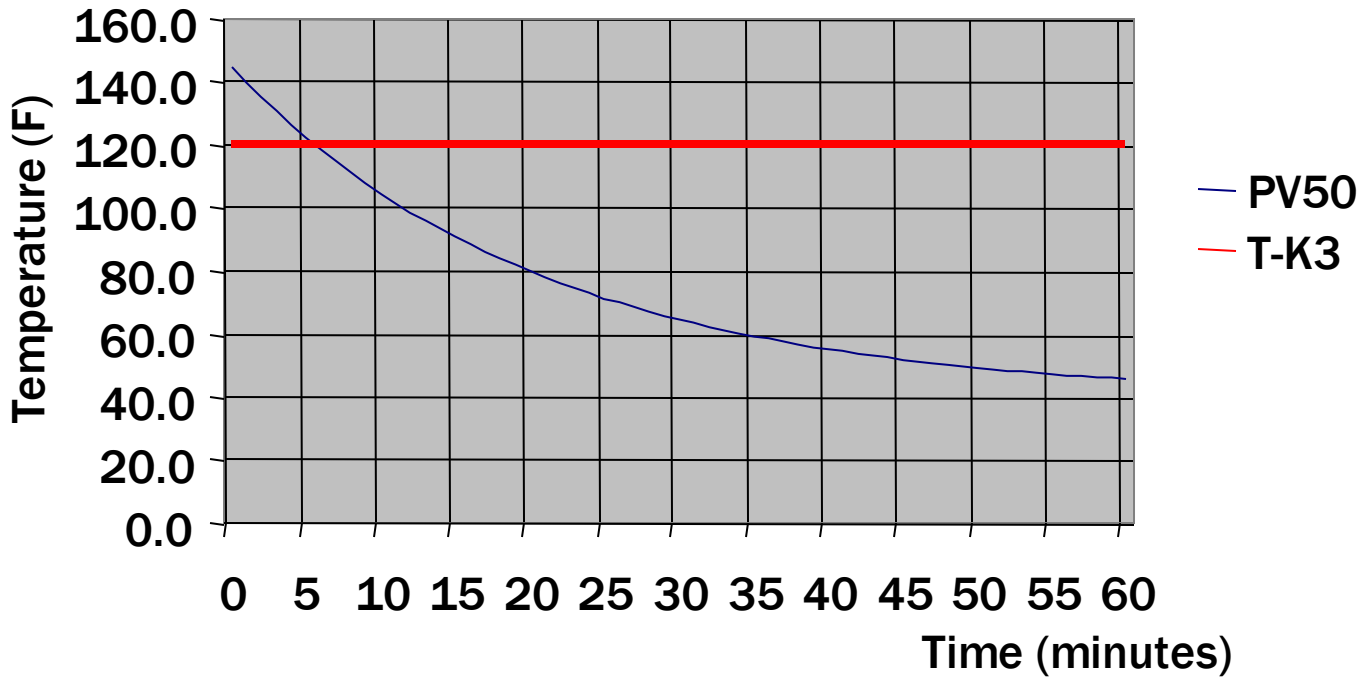

LIFESTYLE ADAPTATION

Zero Gas Usage

0

Endless Hot Water

∞

Examples:
-Traveling for Work
-Vacationing

Examples:
-Long Relaxing Shower
-Guests Visiting